

Vento Expert A50 C1-1 L035 S W V.2

Single-room heat recovery units with Wi-Fi control

- Air flow in heat recovery mode: 25
- Sound pressure level LpA at 1 m: 30
- Heat exchanger type: Regenerative
- Heat exchanger material: Ceramic
- Enthalpy heat exchanger
- Control: Smartphone
- Casing material: Plastic
- CO2 sensor: Optional
- Shutters

	Unit of measurement	Vento Expert A50 C1-1 L035 S W V.2		
Speed	-	1	2	3
Minimum supply voltage	V	100		
Maximum supply voltage	V	240		
Power supply frequency	Hz	50/60		
Air flow in ventilation mode	m³/h	15	30	50
Air flow in heat recovery mode	m³/h	8	15	25
Sound pressure level LpA at 1 m	dB(A)	20	27	30
Heat recovery efficiency, max	%	88		
Heat exchanger type	-	Regenerative		
Heat exchanger material	-	Ceramic		
Transported air temperature (max)	°C	40		
Transported air temperature (min)	°C	-20		
Ingress protection rating	-	IP24		

Dimensions

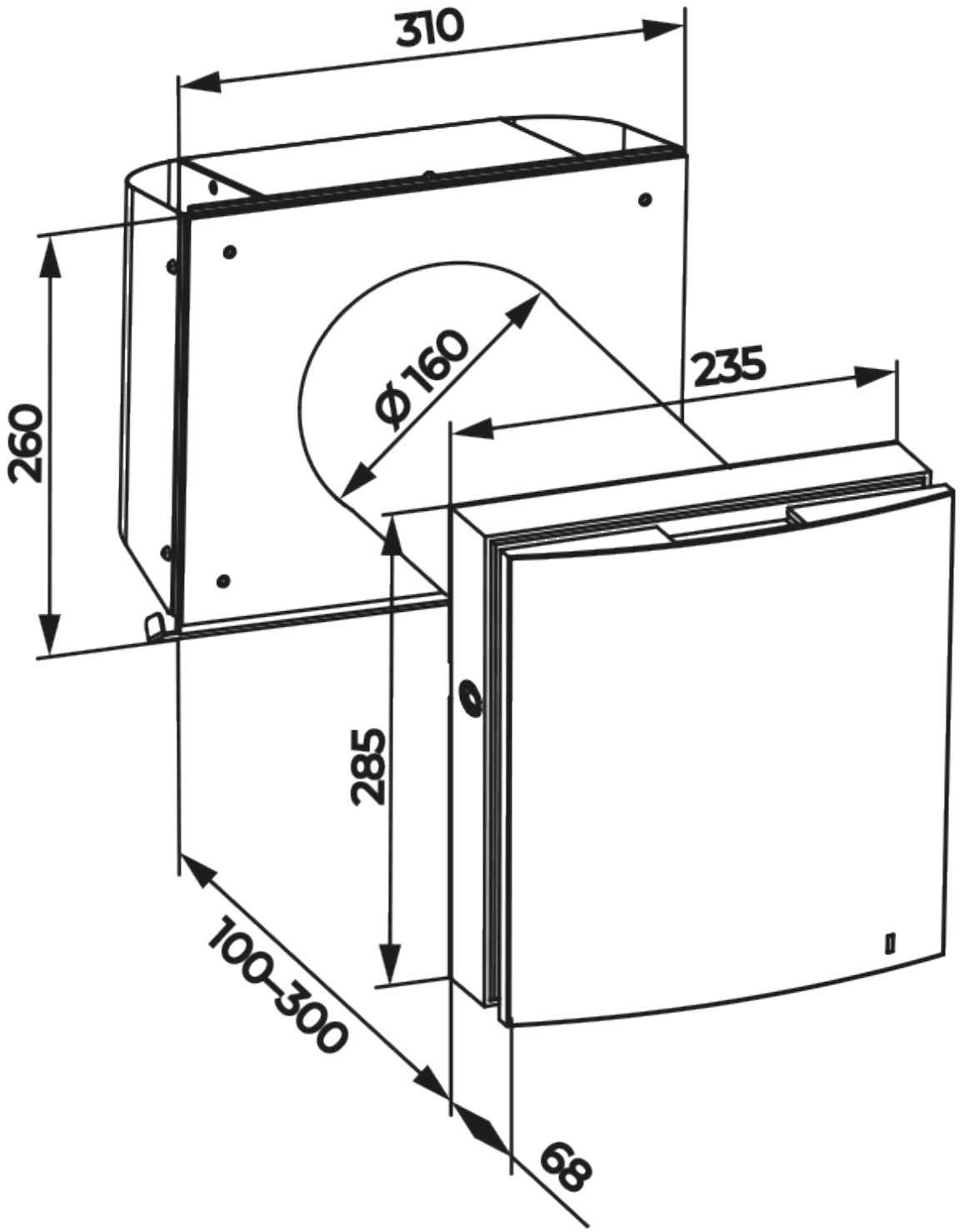
310
260
Ø160
235
285
100-300
68

Ecodesign

Trademark	Blauberg					
Model	Vento Expert A50 C1-1 L035 S W V.2					
Specific energy consumption (SEC) (kWh/(m²/a))	Cold		Average		Warm	
	-80.7	A+	-38.8	A	-14.9	E
Type of ventilation unit	Bidirectional					
Type of drive installed	Variable speed					
Type of heat recovery system	Regenerative					
Thermal efficiency of heat recovery (%)	77					
Maximum flow rate (m³/h)	25					
Electric power input (W)	7.1					
Reference flow rate (m³/s)	0.004					
Specific power input (SPI) (W/(m³/h))	0.339					
Control typology	Local demand control					
Maximum internal leakage rates (%)	2.7					
Mixing rate (%)	1					
Airflow sensitivity at +20 Pa and -20 Pa (%)	0.2					
The indoor/outdoor air tightness (m³/h)	5.2					
Declared typology	RVU BVU					
Sound power level (dB(A))	38					
The annual electricity consumption (AEC) (kWh/a)	Cold		Average		Warm	
	197		197		197	

Accessories

Control Panels

Name	Photo	Description
SE Vento Expert W		Control panel

CO2 sensors

Name	Photo	Description

CD-1		CO2 sensors
CD-2		CO2 sensors

Hoods

Name	Photo	Description
AH-S chrome 160		Stainless steel ventilation hood
AH-S white 160		Stainless steel ventilation hood

Plastic

Name	Photo	Description
KIT BlauPlast white 160		Kit for angular mounting (for walls with standard thickness)
KIT BlauPlast chrome 160		Kit for angular mounting (for walls with standard thickness)

Other accessories

Name	Photo	Description
FP2 Vento G3		G3 filter kit (2 pcs.)
FB Vento Expert A50		Remote control

Cooker Hoods

Name	Photo	Description
Pre-installation Kit Vento Expert A50-1 S		Pre-installation kit for mounting into thin walls. Includes: air duct; AH-S chrome 160 outer ventilation hood; polystyrene foam plug; polystyrene foam wedges.
Completion Kit Vento Expert A50-1 W V.2		Final mounting kit. Includes: cartridge with a heat exchanger, a fan and G3 filters; indoor unit with a controller and shutters; remote control.

S Vento Expert A50		Cardboard template for indoor installation of the unit