

Ultra 250 Round

Centrifugal exhaust low-noise fans for ceiling mounting

- Casing material: Plastic
- Backdraft protection: Backdraft damper

	Unit of measurement	Ultra 250 Round
Minimum supply voltage	V	220
Maximum supply voltage	V	240
Power supply frequency	Hz	50
Maximum airflow	m^3/h	482
Ingress protection rating	-	IPX4
Impeller material	-	Plastic

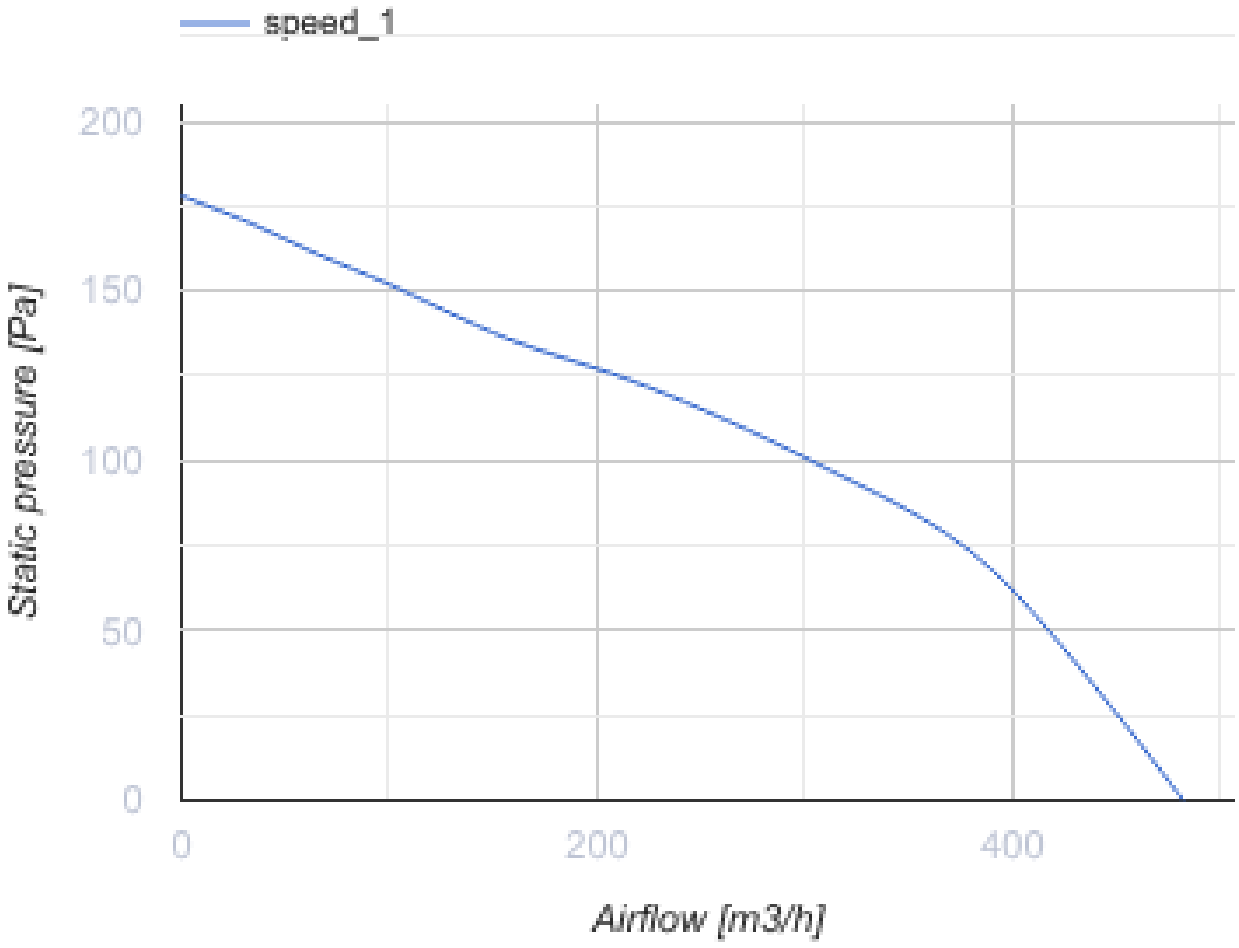

Dimensions

a	b	c	Ø d
198	38	330	148

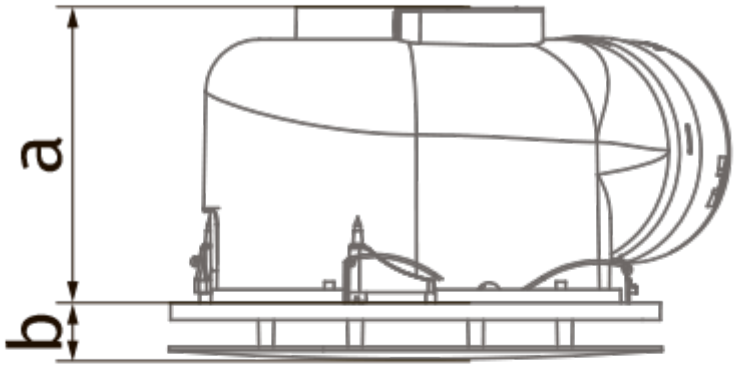
a
b

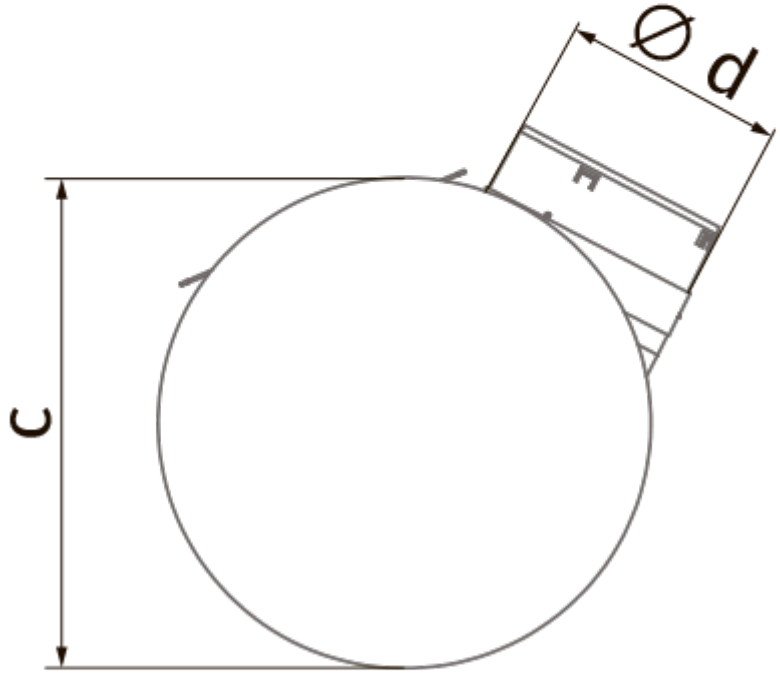
Ø d
c