

Tubo-U 100

Inline axial fan for supply and exhaust ventilation

• Casing material: Plastic

	Unit of measurement	Tubo-U 100
Phases	-	N/A
Maximum supply voltage	V	240
Minimum supply voltage	V	220
Power supply frequency	Hz	50
Maximum airflow	m³/h	102
Ambient air temperature min	°C	1
Ambient air temperature max	°C	40
Ingress protection rating	-	IPX4
Impeller material	-	Plastic

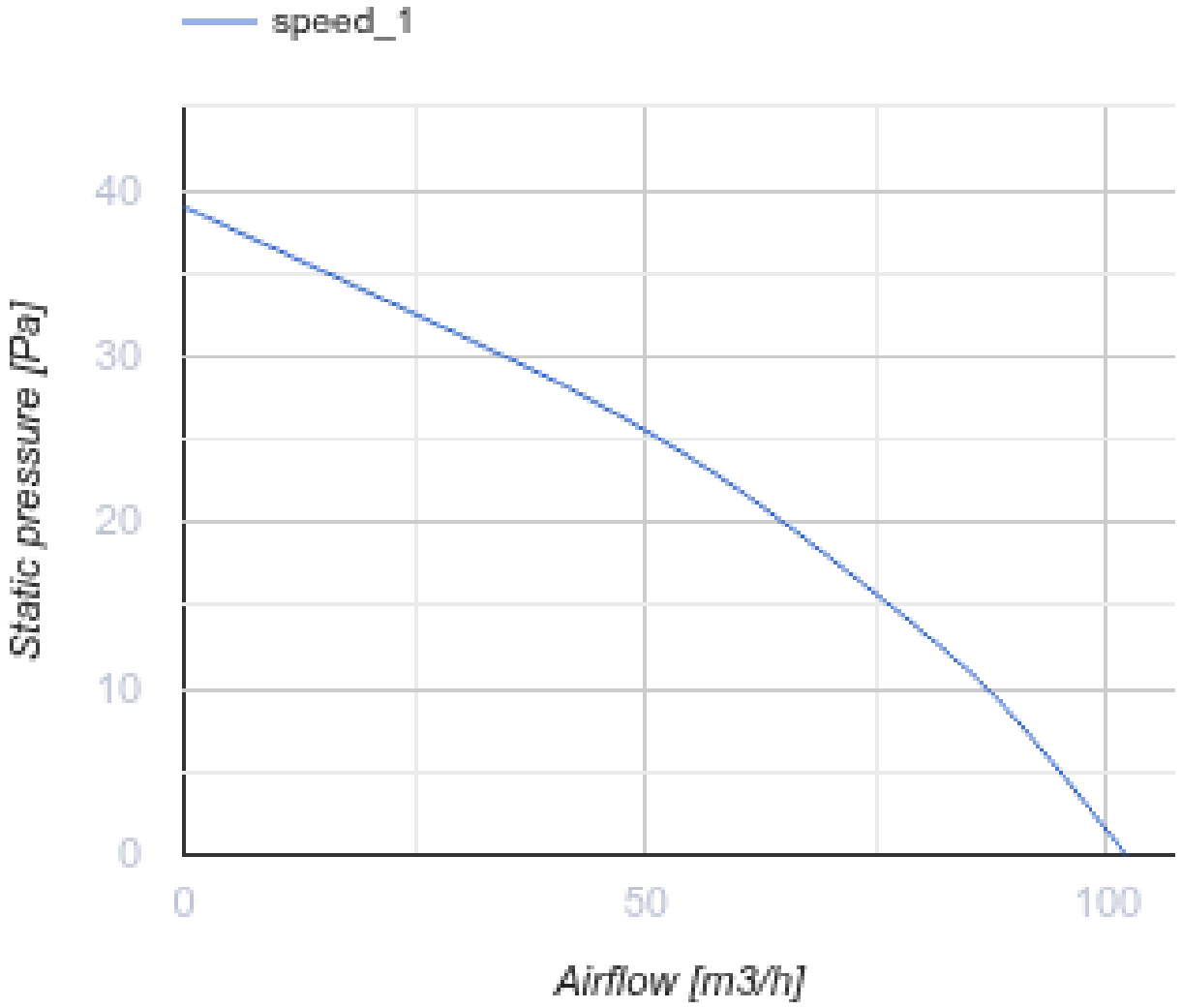

Dimensions

a	b	c	c1	Ø d
160	110	100	45	100

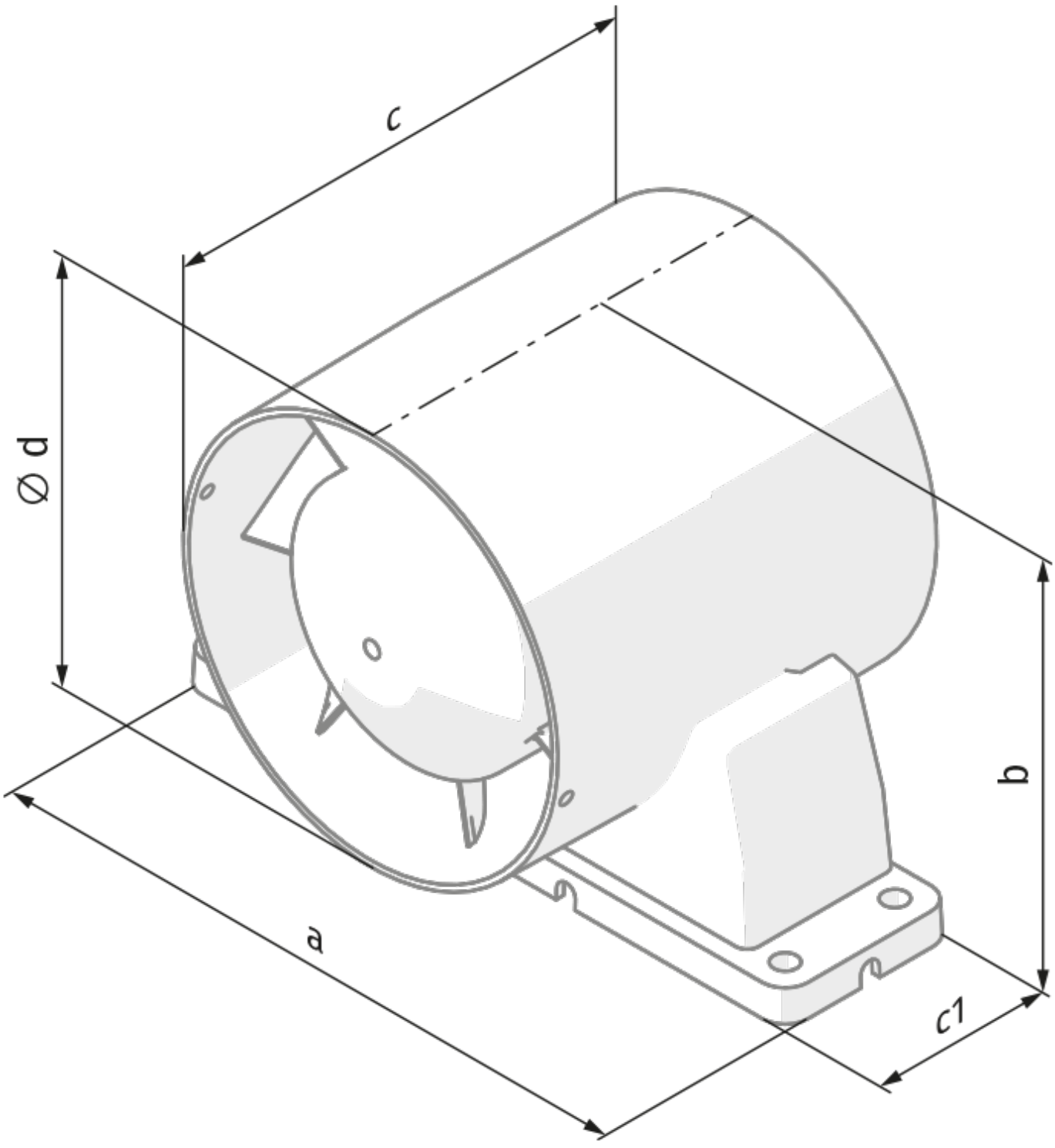
c
Ø d
b
a
c1