

Sileo Max 150 H

High-performance low noise extract fans

- Casing material: Plastic
- Backdraft protection: Backdraft damper
- Humidity sensor
- Timer: Turn off timer

	Unit of measurement	Sileo Max 150 H	
Speed	-	1	2
Phases	-	1	
Maximum supply voltage	V	240	
Minimum supply voltage	V	220	
Power supply frequency	Hz	50/60	
Maximum airflow	m³/h	280	370
Weight	kg	1.33	
Ambient air temperature max	°C	40	
Ambient air temperature min	°C	1	
Ingress protection rating	-	IP45	
Impeller material	-	Plastic	

Dimensions

a	b	c	Ø d	e
190	214	98	148	32

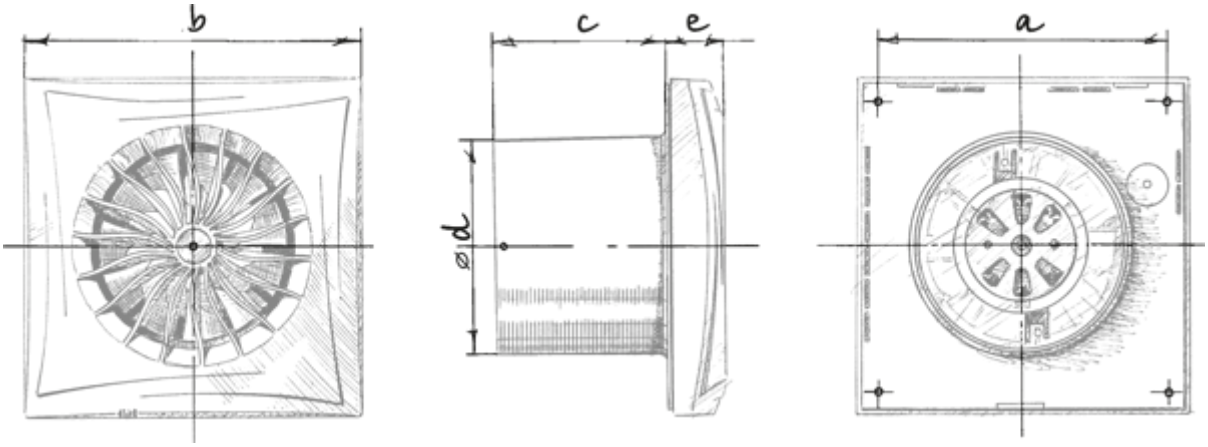
b
c
e
a
ød

Ecodesign

Trademark	Blauberg					
Model	Sileo Max 150 H					
Specific energy consumption (SEC) (kWh/(m²/a))	Cold		Average		Warm	
	-31.4	B	-15	E	-5.6	F
Type of ventilation unit	Unidirectional					
Type of drive installed	2-speed					
Type of heat recovery system	None					
Maximum flow rate (m³/h)	370					
Electric power input (W)	22					
Reference flow rate (m³/s)	0.078					
Specific power input (SPI) (W/(m³/h))	0.068					
Control typology	Manual control					
Maximum external leakage rates (%)	2.7					
Sound power level (dB(A))	52					
Declared typology	RVU UVU					
The annual electricity consumption (AEC) (kWh/a)	Cold		Average		Warm	
	85		85		85	
The annual heating saved (AHS) (kWh/a)	Cold		Average		Warm	
	3355		1715		776	