

S-Vent 180x74-1,1-2D-R90

Radial fans

• Impeller type: Centrifugal impeller with forward curved blades
• Casing material: Coated steel

	Unit of measurement	S-Vent 180x74-1,1-2D-R90
Phases	-	3
Maximum supply voltage	V	400
Minimum supply voltage	V	400
Power supply frequency	Hz	50
Maximum airflow	m³/h	1950
Weight	kg	14.5
Transported air temperature (max)	°C	60
Ingress protection rating	-	IP54
Ingress protection rating of the drive	-	IP54
Impeller material	-	Galvanized steel

Dimensions

Ø D	Ø d	Ø D1	B	H	H1	H2	L	L1	L2	P	M	I	G	K	S
180	10	10	311	414	143	120	365	143	114	146	270	270	22	314	90

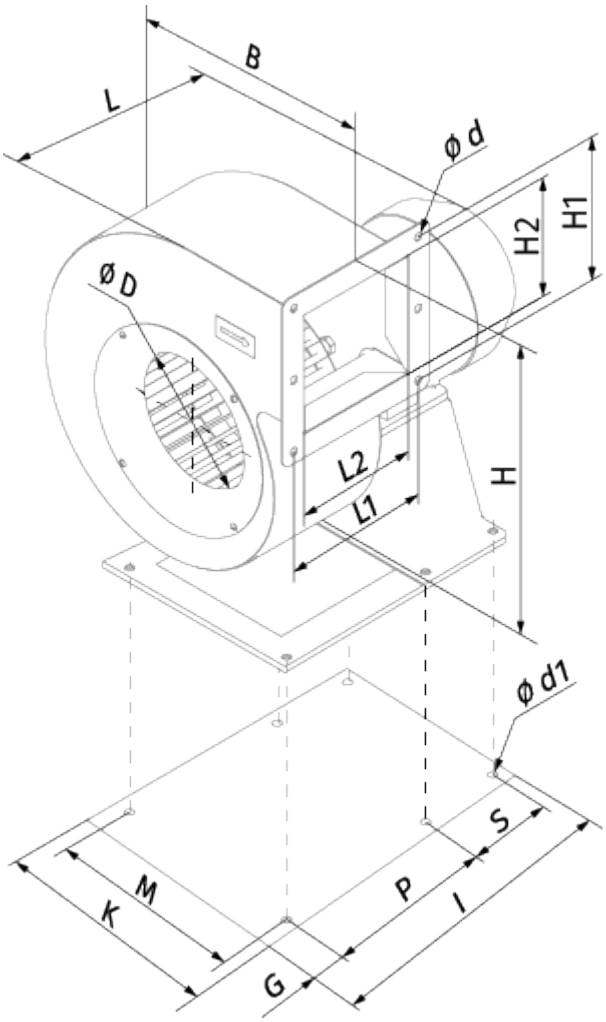
B
L
ø d
H2
H1
ø D
L2
L1
H
ø d1
S
M
K
P
I
G