

Reneo SE 270 L S21

Heat and energy recovery air handling units

- Power of electrical preheater: 1400
- Heat exchanger type: Counter flow
- Heat exchanger material: Polystyrene
- Sound-insulated casing
- Bypass: Auto
- Reheater: Optional
- Preheater: Built-in
- BMS protocol: ModBus
- Control: Smartphone
- Casing material: EPP
- Humidity sensor: Optional
- CO2 sensor: Optional
- PM2.5 sensor: Optional

	Unit of measurement	Reneo SE 270 L S21
Phases	-	1
Maximum supply voltage	V	230
Minimum supply voltage	V	230
Power supply frequency	Hz	50/60
Power of electrical preheater	W	1400
Maximum airflow	m³/h	331
Heat recovery efficiency, max	%	89
Heat exchanger type	-	Counter flow
Heat exchanger material	-	Polystyrene
Weight	kg	22
Transported air temperature (max)	°C	40
Transported air temperature (min)	°C	-25
Ambient air temperature max	°C	40
Ambient air temperature min	°C	1
Ingress protection rating	-	IP22
Ambient air humidity max	%	60
Ingress protection rating of the drive	-	IP44

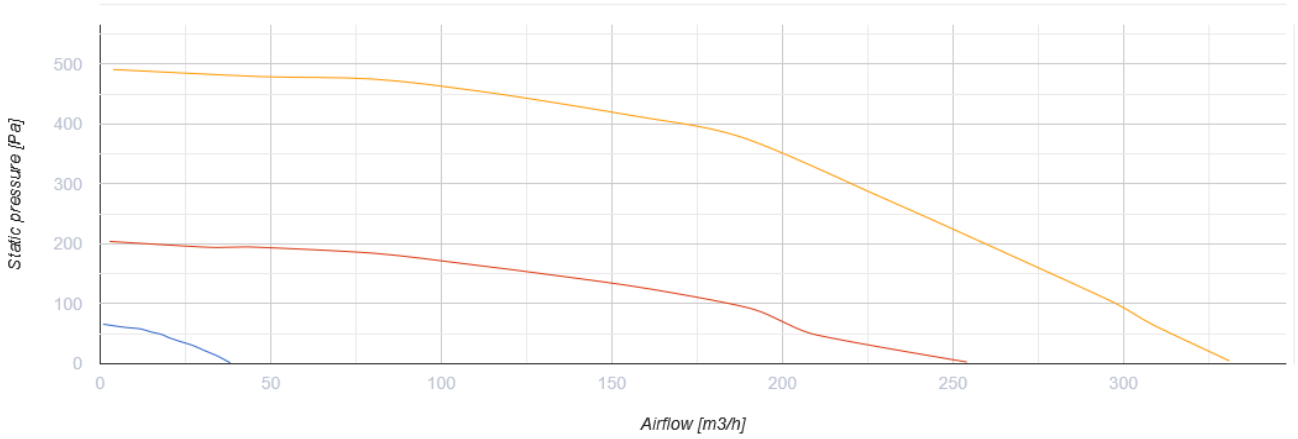

Dimensions

D	H	H1	L	L1	W / B	W1 / B1
125	900	958	452	190	598	273

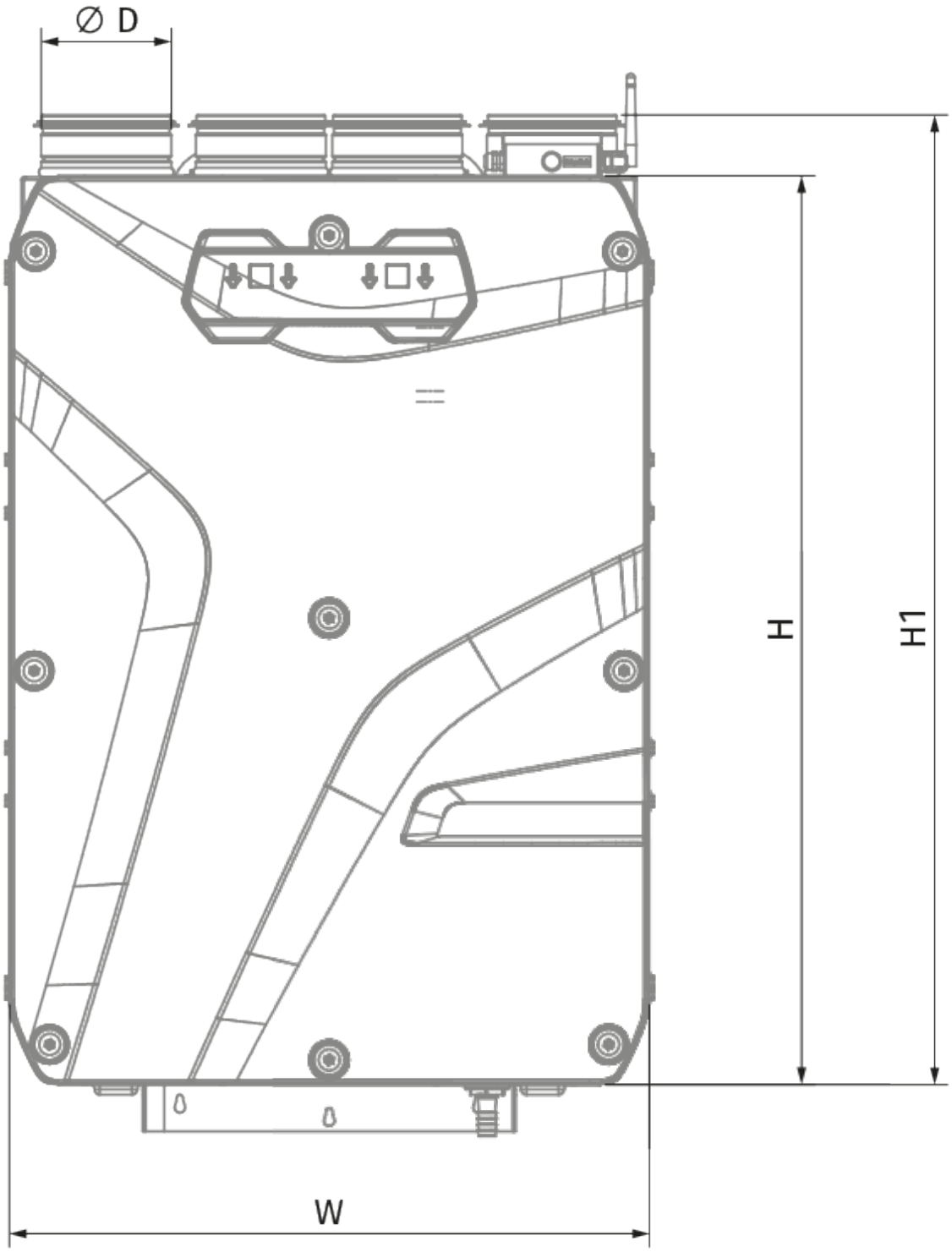
∅ D
H
H1
W

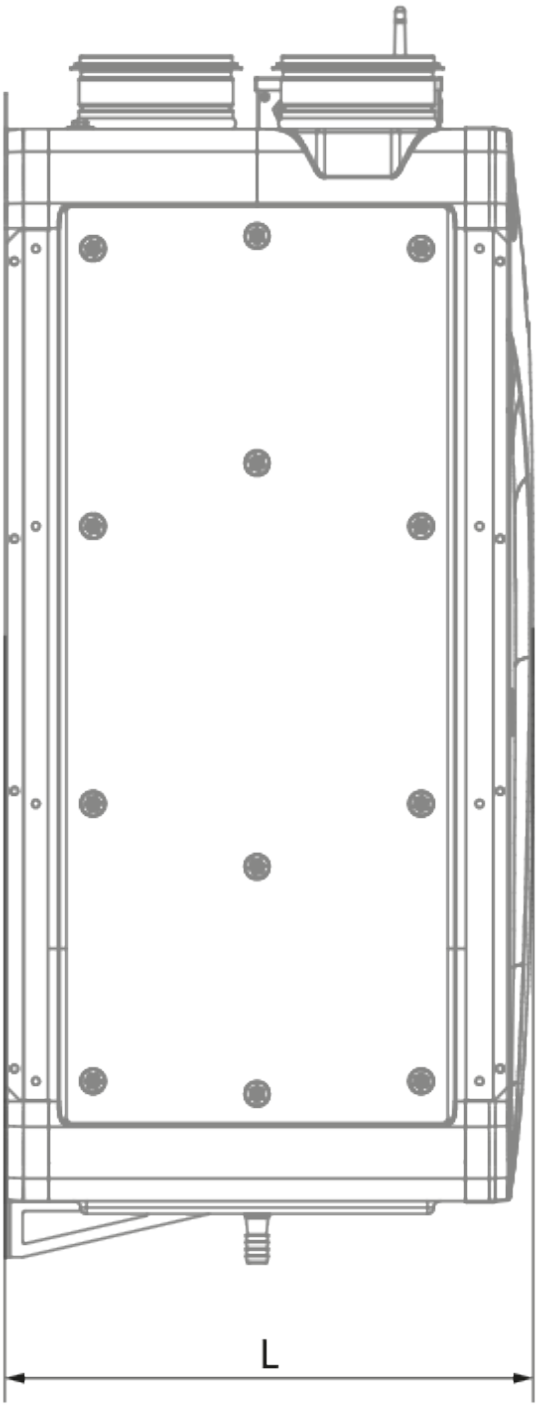
L

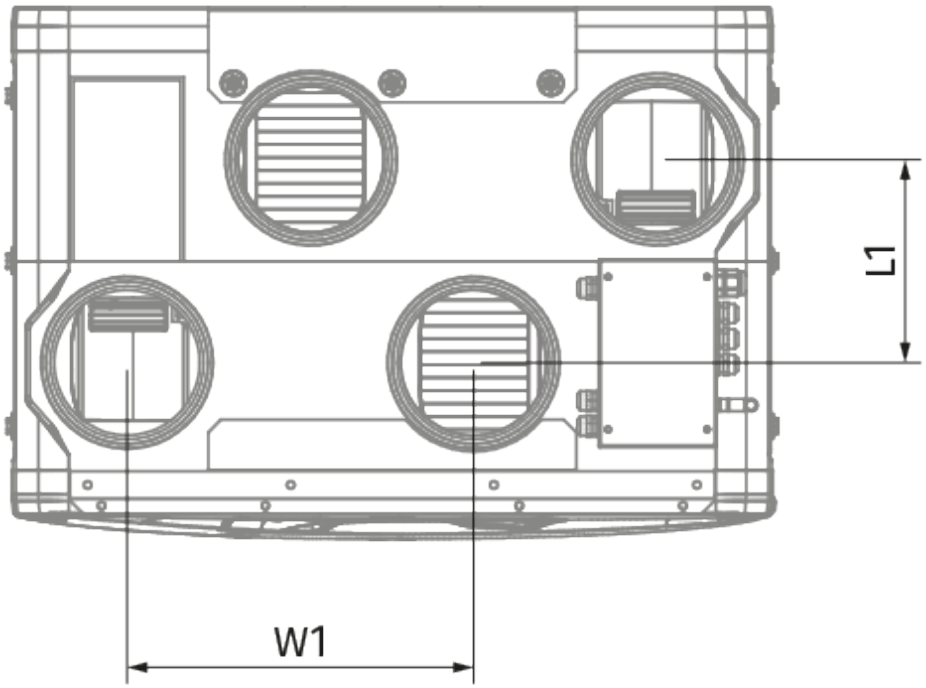
L1
W1

Ecodesign

Trademark	Blauberg					
Model	Reneo SE 270 L S21					
Specific energy consumption (SEC) (kWh/(m²/a))	Cold		Average		Warm	
	-80.5	A+	-41.4	A	-16.4	E
Type of ventilation unit	Bidirectional					
Type of drive installed	Variable speed					
Type of heat recovery system	Recuperative					
Thermal efficiency of heat recovery (%)	88					
Maximum flow rate (m³/h)	298					
Electric power input (W)	176					
Reference flow rate (m³/s)	0.058					
Reference pressure difference (Pa)	50					
Specific power input (SPI) (W/(m³/h))	0.351					
Control typology	Local demand control					
Maximum internal leakage rates (%)	2.7					
Maximum external leakage rates (%)	2.7					
Sound power level (dB(A))	55					
The annual electricity consumption (AEC) (kWh/a)	Cold		Average		Warm	
	768		231		186	
The annual heating saved (AHS) (kWh/a)	Cold		Average		Warm	
	9100		4652		2104	

Accessories

Condensation drainage

Name	Photo	Description
SFK 20x32		Hydraulic syphon for condensate drainage

Control Panels

Name	Photo	Description

S25		LCD control panel
S22		Control panels
S22 Wi-Fi		Control panels

CO2 sensors

Name	Photo	Description
CD-1		CO2 sensors
CD-2		CO2 sensors

Humidity sensors

Name	Photo	Description
FS2		Humidity sensor

Other accessories

Name	Photo	Description
FP 356x100x48 ePM1 60% F7		F7 panel filter
FP 356x100x48 Coarse 90% G4		G4 panel filter

Electric actuators

Name	Photo	Description

Belimo TF230		Electric actuators