

Reneo S 351 R S21

Heat and energy recovery air handling units

- Heat exchanger type: Counter flow
- Heat exchanger material: Polystyrene
- Sound-insulated casing
- Bypass: Auto
- Reheater: Optional
- BMS protocol: ModBus
- Control: Smartphone
- Casing material: EPP
- Humidity sensor: Optional
- CO2 sensor: Optional
- PM2.5 sensor: Optional

	Unit of measurement	Reneo S 351 R S21
Phases	-	1
Minimum supply voltage	V	230
Maximum supply voltage	V	230
Power supply frequency	Hz	50/60
Maximum airflow	m³/h	410
Heat recovery efficiency, max	%	93
Heat exchanger type	-	Counter flow
Heat exchanger material	-	Polystyrene
Weight	kg	26
Transported air temperature (max)	°C	40
Transported air temperature (min)	°C	-25
Ambient air temperature min	°C	1
Ambient air temperature max	°C	40
Ingress protection rating	-	IP22
Ambient air humidity max	%	60
Ingress protection rating of the drive	-	IP44

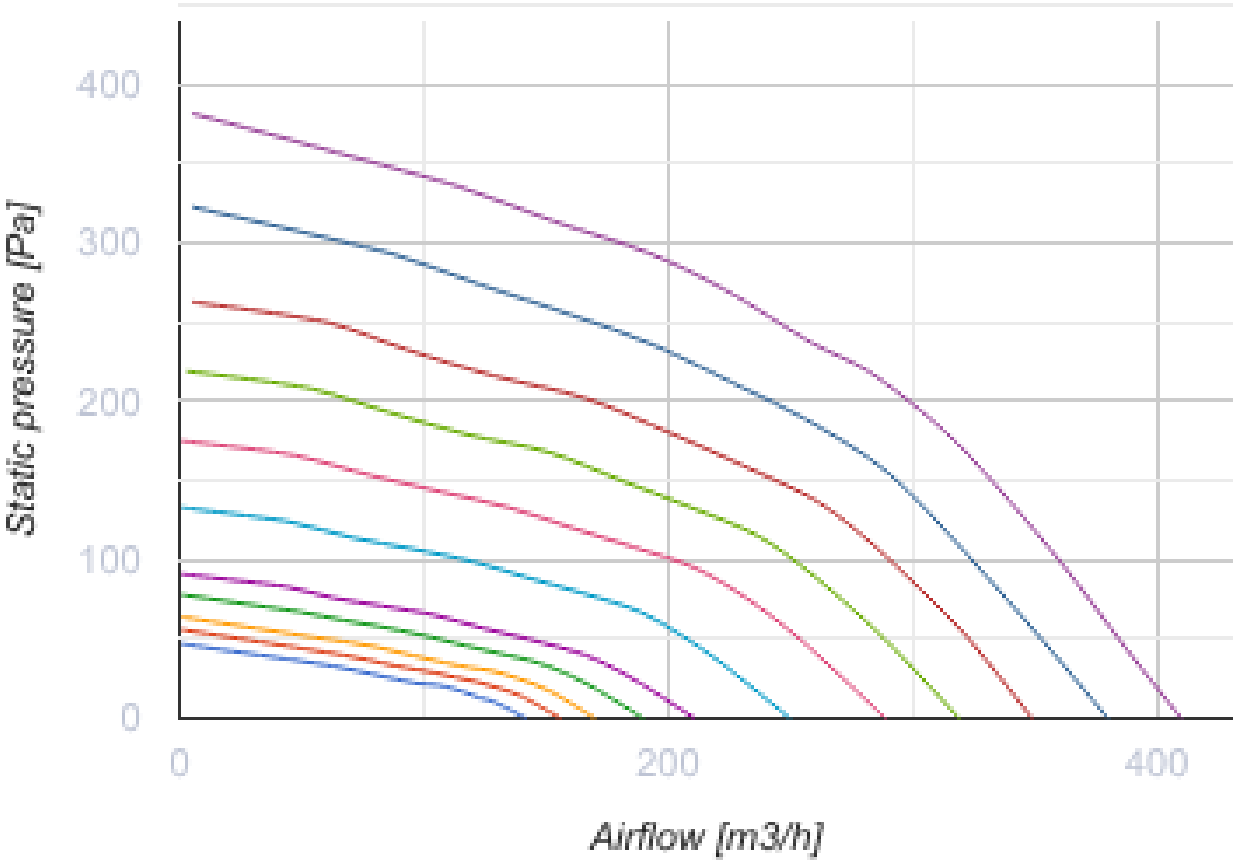
400
300
200
100
0
Static pressure [Pa]
0
200
400
Airflow [m3/h]

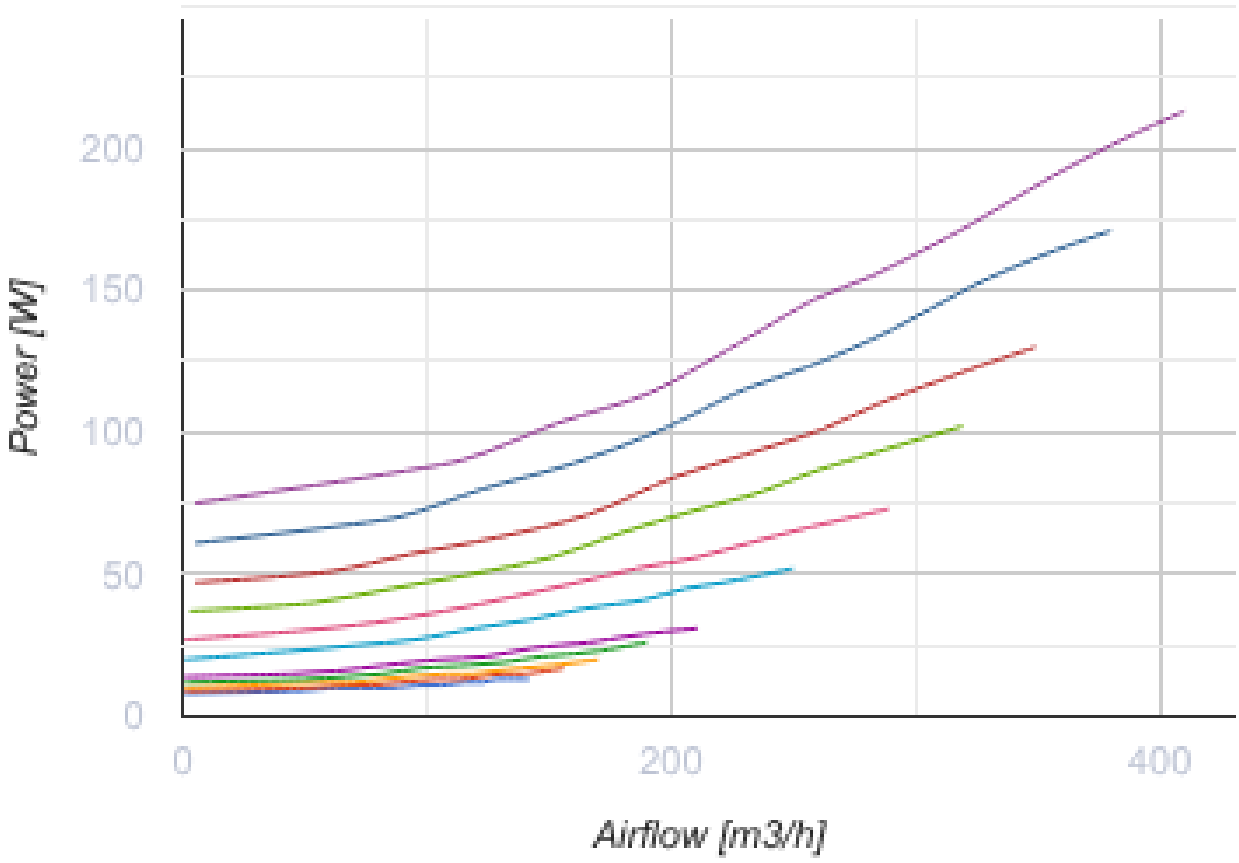

Dimensions

Ø D	H	H1	L	L1	W	W1
160	880	939	616	230	770	355

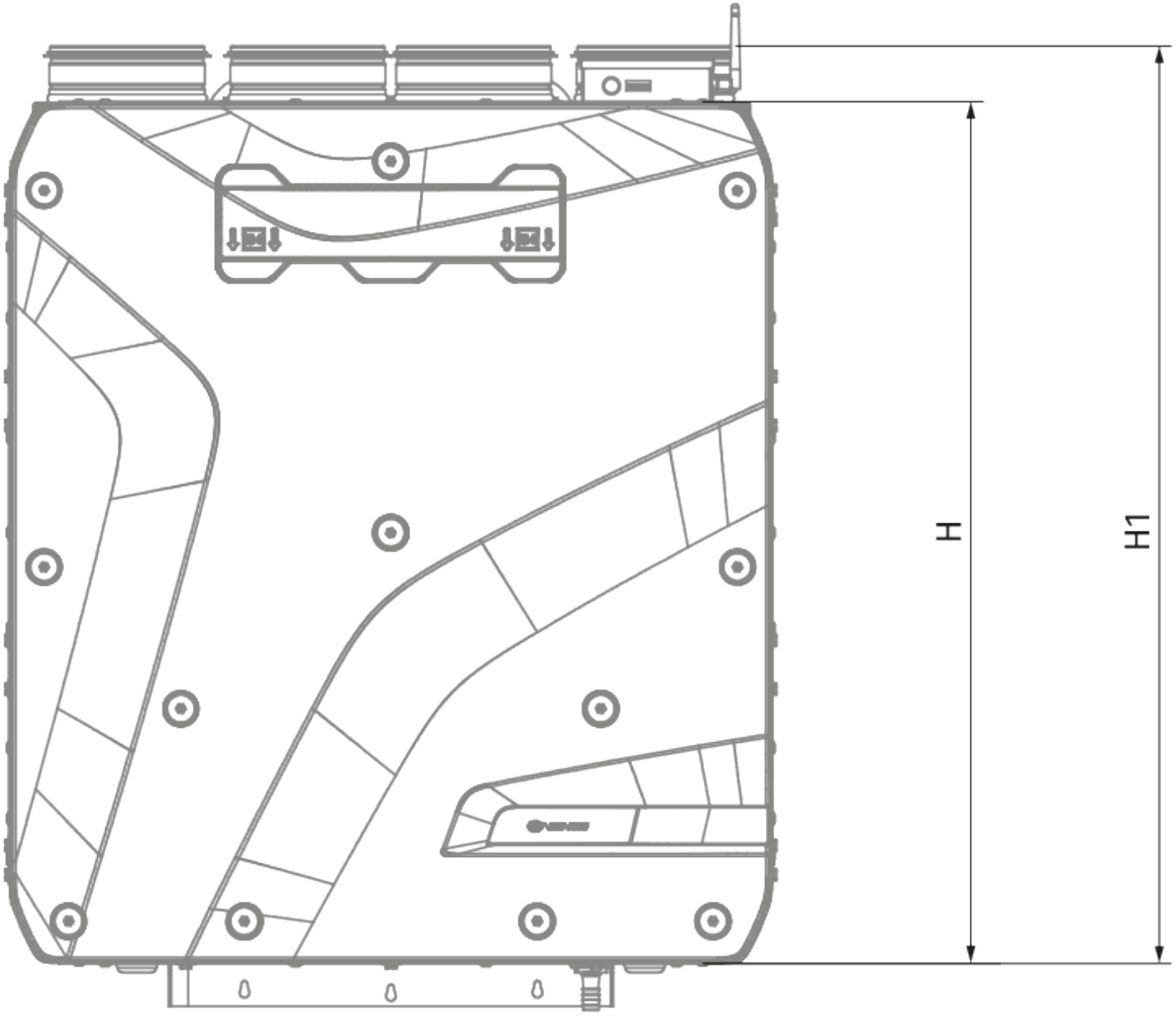
H
H1

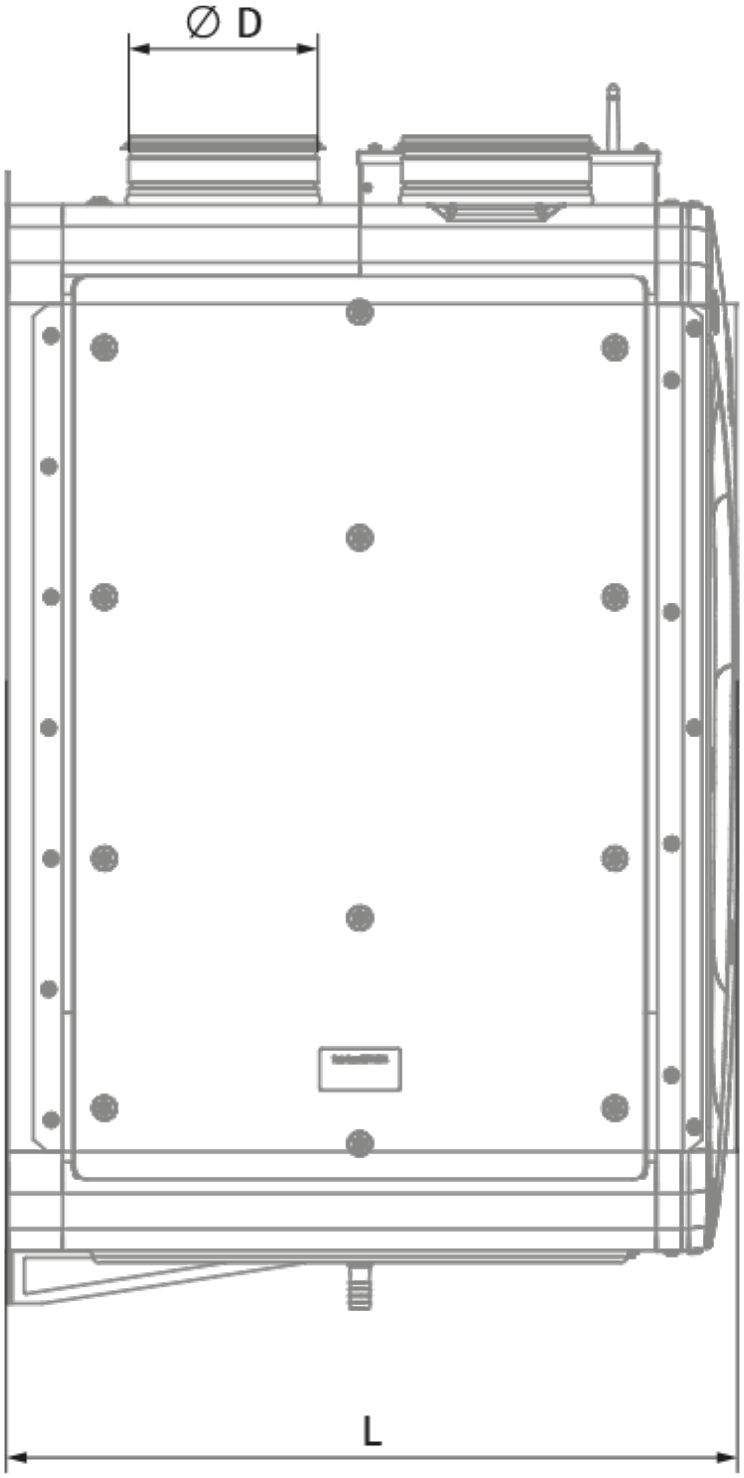
∅ D
L

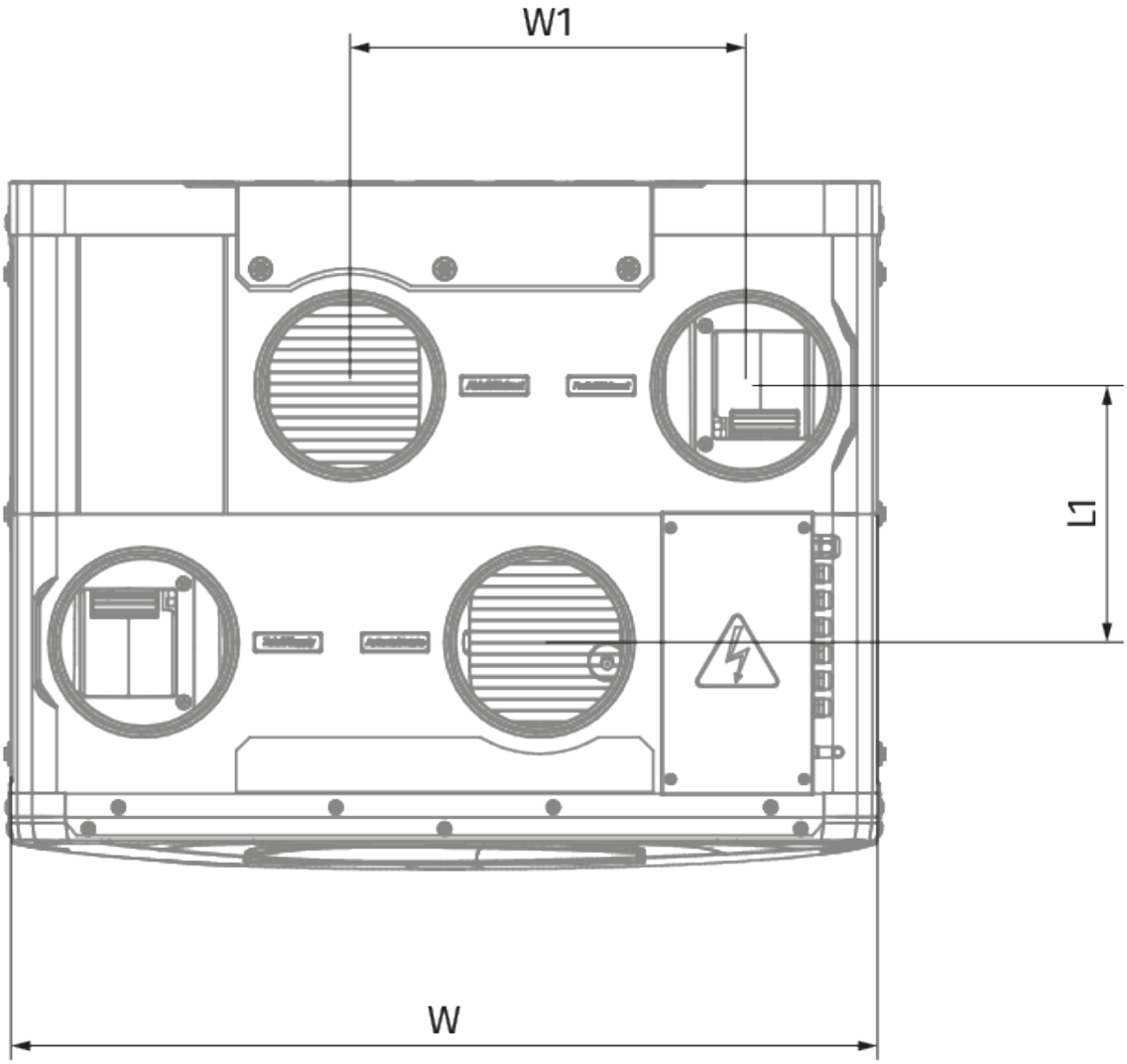
W1
L1
W

Ecodesign

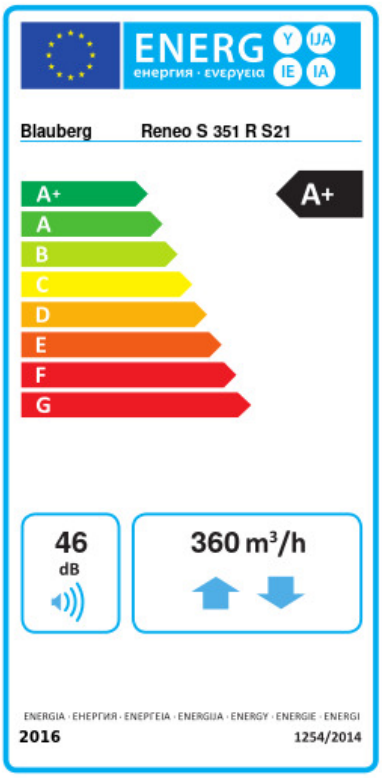

Trademark	Blauberg					
Model	Reneo S 351 R S21					
Specific energy consumption (SEC) (kWh/(m²/a))	Cold		Average		Warm	
	-82.6	A+	-43	A+	-17.8	E
Type of ventilation unit	Bidirectional					
Type of drive installed	Variable speed					
Type of heat recovery system	Recuperative					
Thermal efficiency of heat recovery (%)	90					
Maximum flow rate (m³/h)	360					
Electric power input (W)	213					
Reference flow rate (m³/s)	0.071					
Reference pressure difference (Pa)	50					
Specific power input (SPI) (W/(m³/h))	0.26					
Control typology	Local demand control					
Maximum internal leakage rates (%)	2.7					
Maximum external leakage rates (%)	2.7					
Sound power level (dB(A))	46					
Declared typology	RVU BVU					
The annual electricity consumption (AEC) (kWh/a)	Cold		Average		Warm	
	720		183		138	
The annual heating saved (AHS) (kWh/a)	Cold		Average		Warm	
	9181		4693		2122	

Accessories

Condensation drainage

Name	Photo	Description
SFK 20x32		Hydraulic syphon for condensate drainage

Control Panels

Name	Photo	Description

S25		LCD control panel
S22		Control panels
S22 Wi-Fi		Control panels

CO2 sensors

Name	Photo	Description
CD-1		CO2 sensors
CD-2		CO2 sensors

Humidity sensors

Name	Photo	Description
FS2		Humidity sensor

Other accessories

Name	Photo	Description
FP 496x150x60 ePM1 60 % (F7)		F7 panel filter
FP 496x150x60 Coarse 90 % (G4)		G4 panel filter
EP-Reneo S 351		Decorative panel

Electric actuators

Name	Photo	Description
Belimo TF230		Electric actuators