

Primo 250

Mixed-flow inline fans

- Impeller type: Mixed-flow
- Casing material: Polypropylene
- Installation in any position

	Unit of measurement	Primo 250		
Speed	-	1	2	3
Phases	-	1		
Minimum supply voltage	V	230		
Maximum supply voltage	V	230		
Power supply frequency	Hz	50		
Maximum airflow	m³/h	1038	1447	1715
Weight	kg	6.4		
Transported air temperature (max)	°C	55		
Transported air temperature (min)	°C	-25		
Ingress protection rating	-	IPX4		
Ingress protection rating of the drive	-	IP20		
Impeller material	-	Plastic		

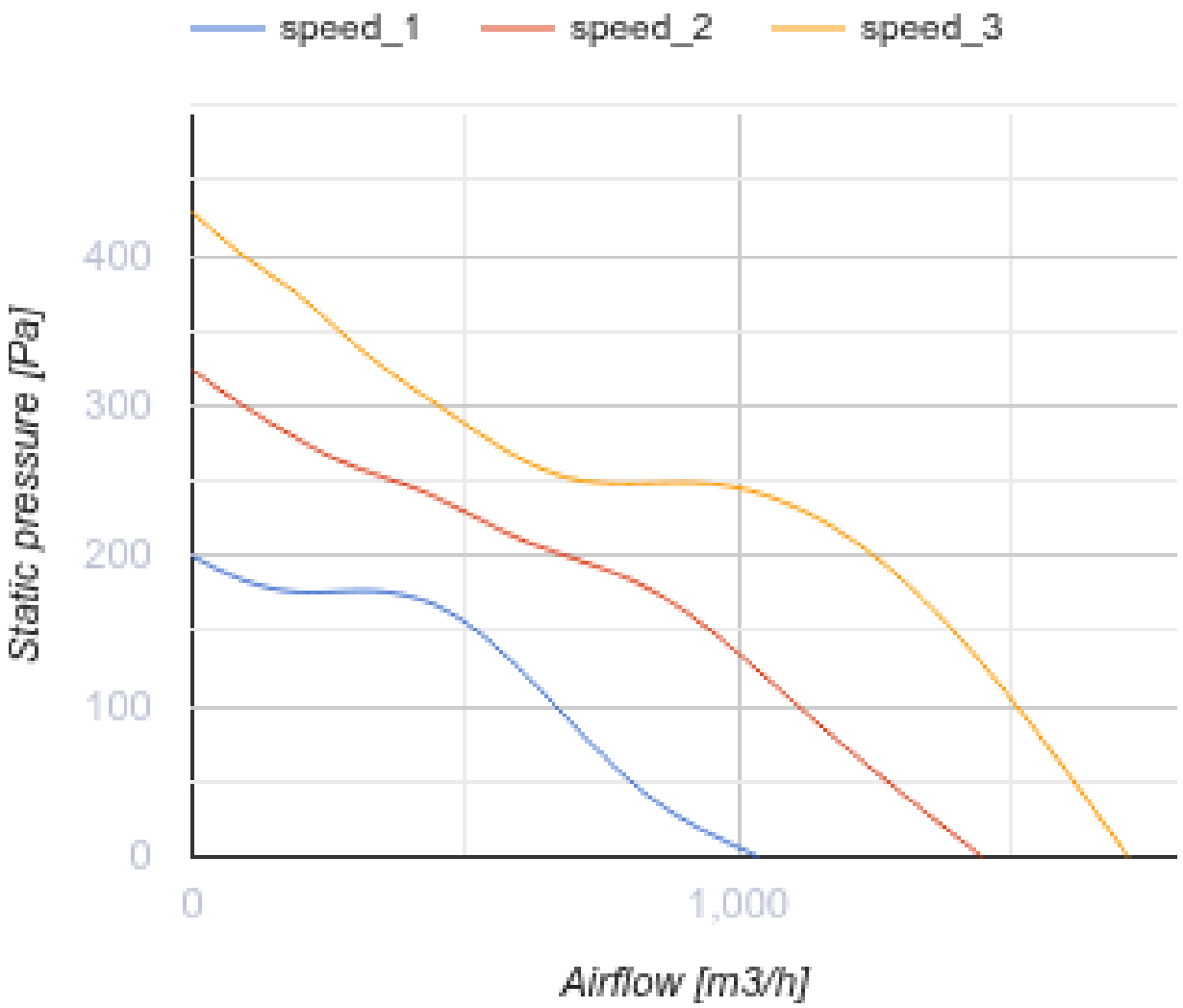
speed_1
speed_2
speed_3
Static pressure [Pa]
400
300
200
100
0
0
1,000
Airflow [m3/h]

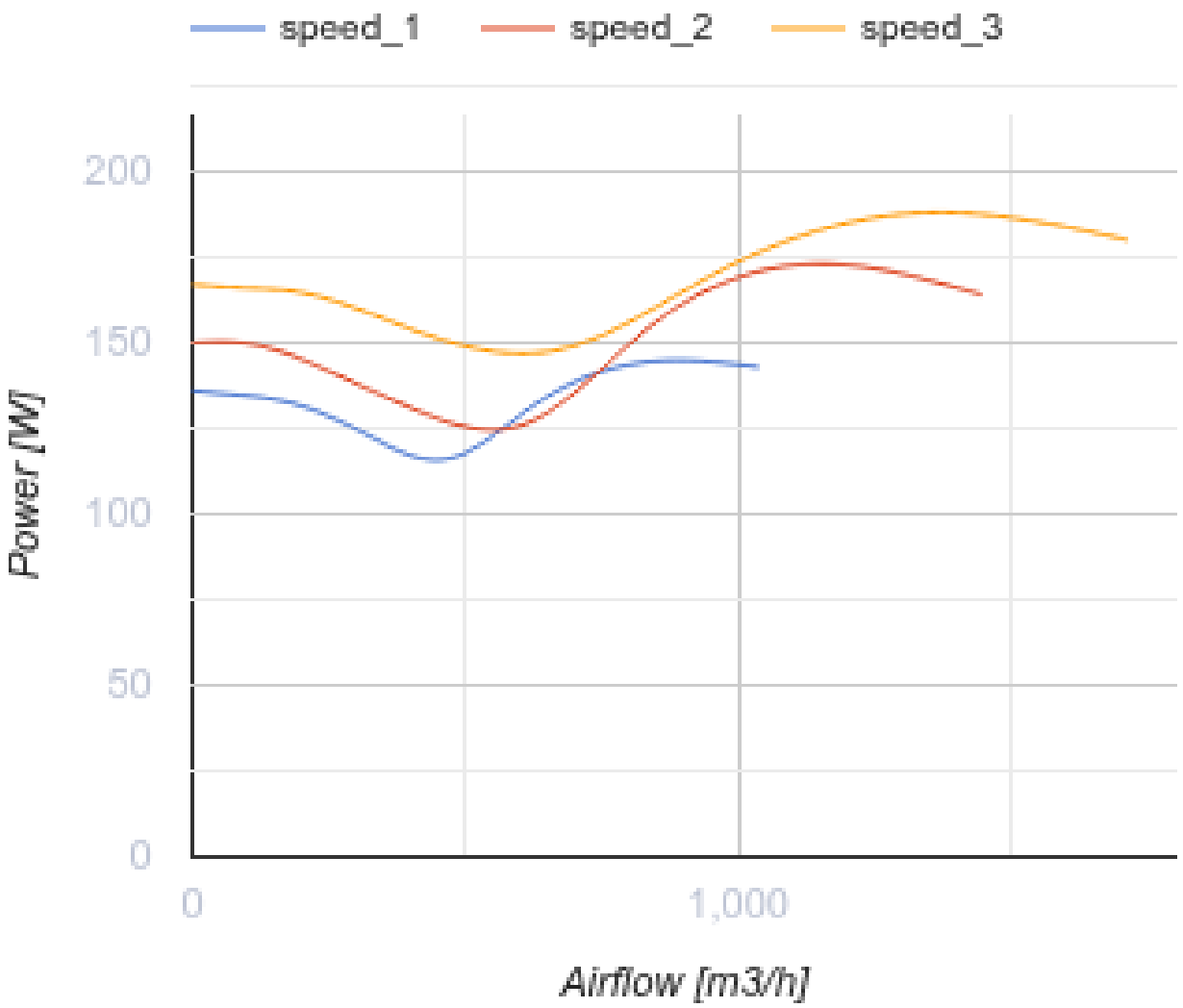

Dimensions

A	B	C	Ø D
342	293	326	250

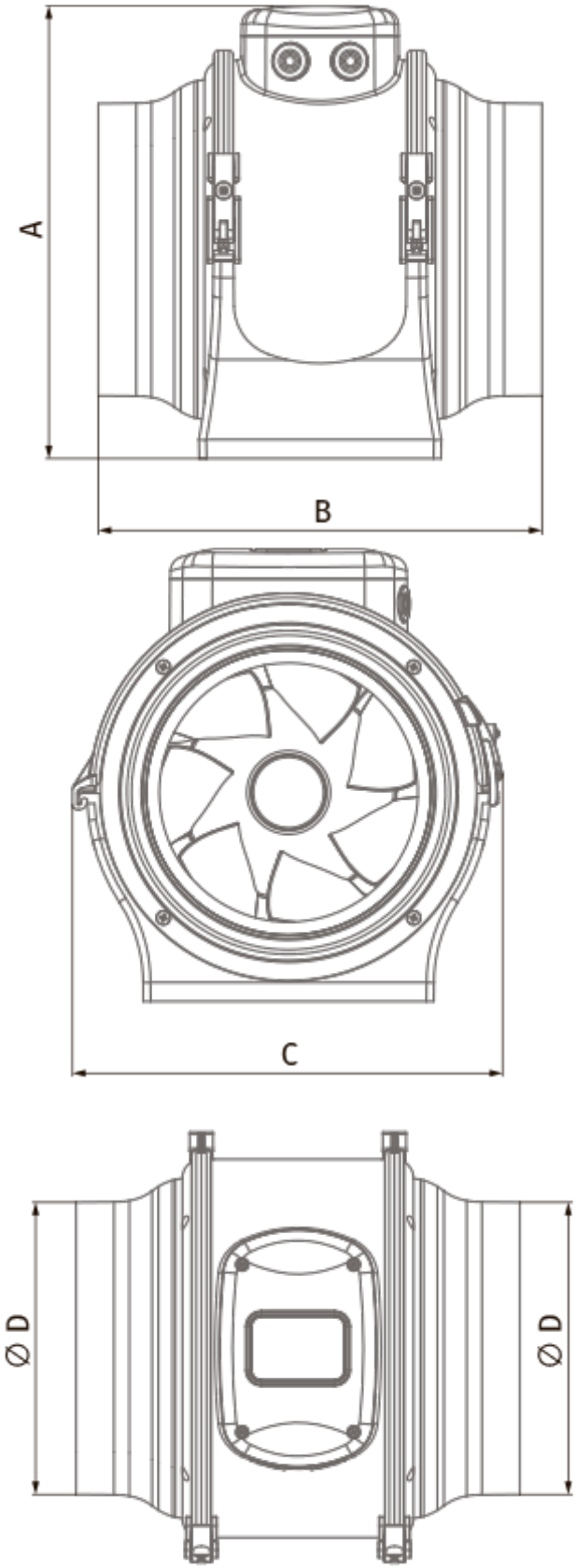
A
B
C
∅ D
∅ D

Ecodesign

Trademark	Blauberg
Model	Primo 250
Type of ventilation unit	Unidirectional
Type of drive installed	Integrated VSD
Type of heat recovery system	None
Nominal external pressure (Pa)	248
Maximum external leakage rates (%)	2.7
Static efficiency (%)	39.5
Declared typology	NRVU UVU
Effective electric power input (kW)	0.17
Sound power level (dB(A))	62