

KZ 150

Clamps for round ducts

- Casing material: Galvanized steel

	Unit of measurement	KZ 150
Weight	kg	0.296

Dimensions

ØD	H
150	224

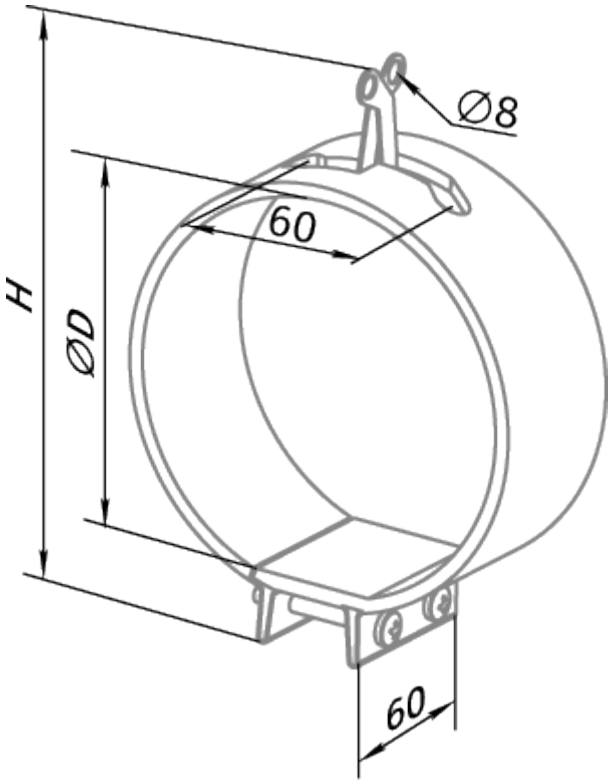
Ø8
60
H
ØD
60