

KSZ 80

Cross joint for round duct

- Casing material: Galvanized steel

	Unit of measurement	KSZ 80

Dimensions

Ø D1	Ø D2	L
80	80	170

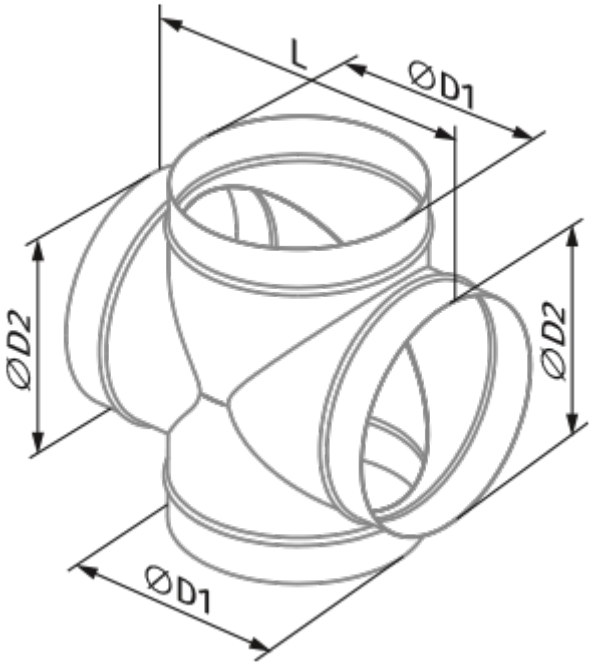
L
ØD1
ØD2
ØD2
ØD1