

KOMFORT Roto EC LEHP 700 S17

Compact heat recovery air handling units

- Power of electrical preheater: 2800
- Heat exchanger type: Rotary
- Heat exchanger material: Aluminum
- Sound-insulated casing
- Preheater: Built-in
- Control: Wired control panel
- Casing material: Aluzinc steel
- Humidity sensor: Optional
- CO2 sensor: Optional
- PM2.5 sensor: Optional

	Unit of measurement	KOMFORT Roto EC LEHP 700 S17
Phases	-	1
Minimum supply voltage	V	230
Maximum supply voltage	V	230
Power supply frequency	Hz	50
Power of electrical preheater	W	2800
Maximum airflow	m³/h	830
Heat recovery efficiency, max	%	85
Heat exchanger type	-	Rotary
Heat exchanger material	-	Aluminum
Weight	kg	160
Transported air temperature (max)	°C	40
Transported air temperature (min)	°C	-25
Ambient air temperature min	°C	1
Ambient air temperature max	°C	40
Ingress protection rating	-	IP22
Ingress protection rating of the drive	-	IP44
Ambient air humidity max	%	80

Dimensions

ØD	B	H	L
249	748	750	1667

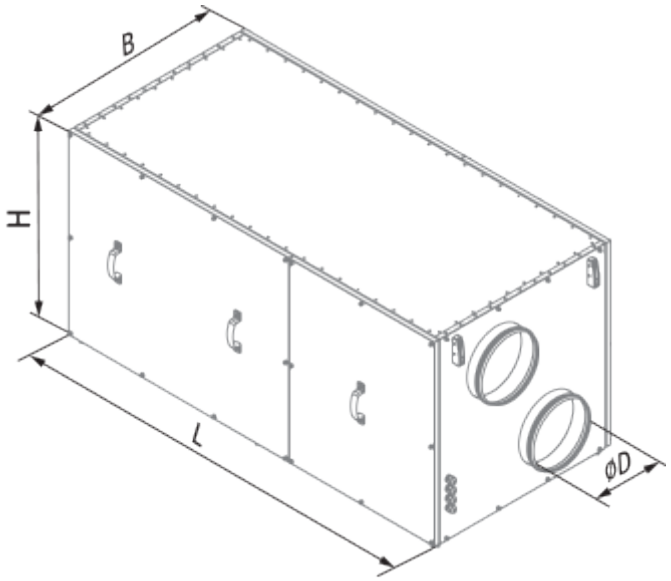

Accessories

Humidity sensors

Name	Photo	Description
FS2		Humidity sensor

Other accessories

Name	Photo	Description
FP 700x352x48 G4		G4 panel filter
FPT 700x351x27 F7		
FPT 700x351x27 G4		