

# KOMFORT EC DBE 300 L S21 DTV

Suspended heat recovery air handling units

- Power of electrical reheater: 1500
- Heat exchanger type: Counter flow
- Heat exchanger material: Polystyrene
- Sound-insulated casing
- Bypass: Auto
- Reheater: Electric
- Preheater: Optional
- BMS protocol: ModBus
- Control: Smartphone
- Casing material: Galvanized steel
- Humidity sensor: Optional
- CO2 sensor: Optional
- PM2.5 sensor: Optional

| | Unit of measurement | KOMFORT EC DBE 300 L S21 DTV |
|---|---|---|
| Phases | - | 1 |
| Minimum supply voltage | V | 230 |
| Maximum supply voltage | V | 230 |
| Power supply frequency | Hz | 50/60 |
| Power of electrical reheater | W | 1500 |
| Maximum airflow | m³/h | 340 |
| Heat recovery efficiency, max | % | 90 |
| Heat exchanger type | - | Counter flow |
| Heat exchanger material | - | Polystyrene |
| Weight | kg | 44 |
| Transported air temperature (max) | °C | 40 |
| Transported air temperature (min) | °C | -25 |
| Ambient air temperature max | °C | 40 |
| Ambient air temperature min | °C | 1 |
| Ingress protection rating | - | IP22 |
| Ambient air humidity max | % | 60 |
| Ingress protection rating of the drive | - | IP44 |

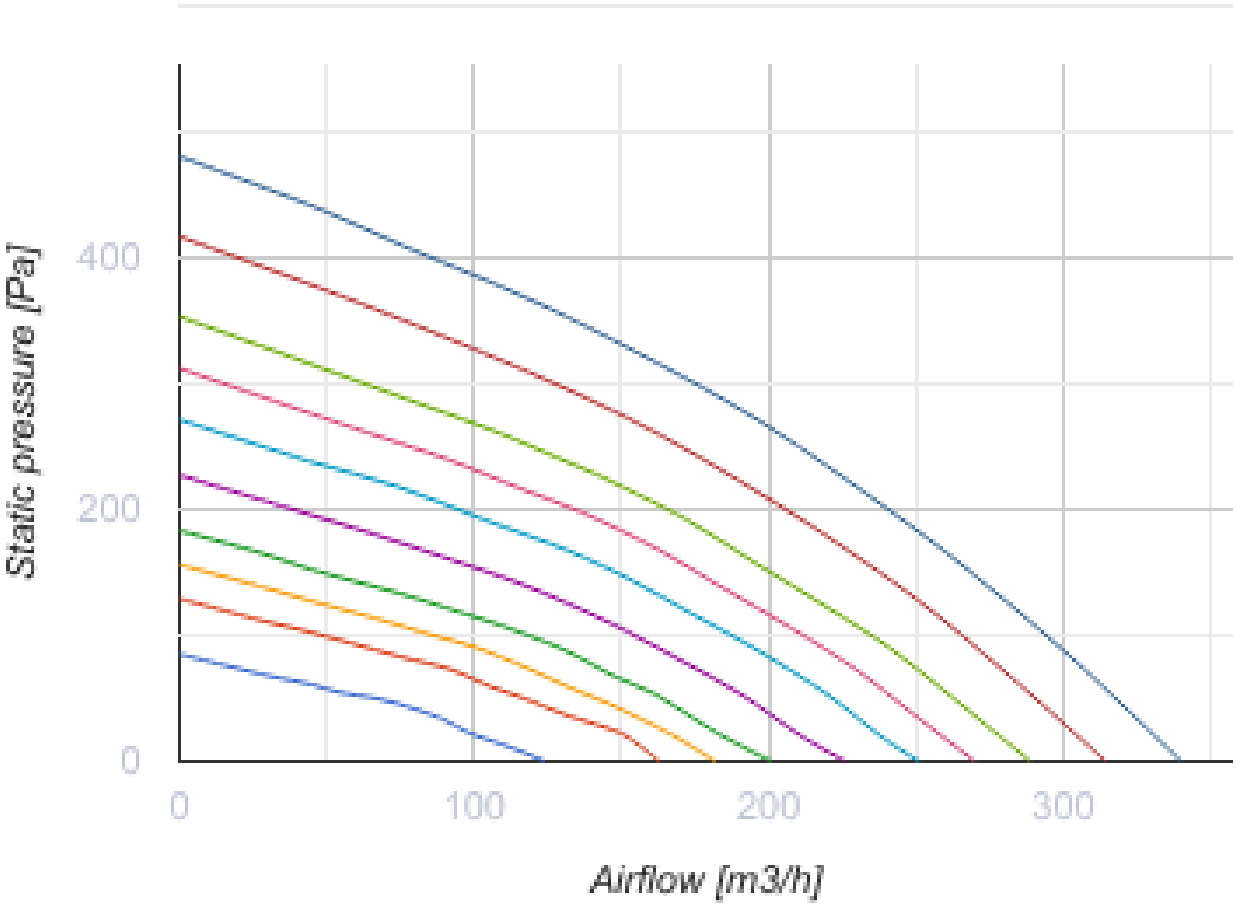
Static pressure [Pa]
400
200
0
0
100
200
300
Airflow [m3/h]

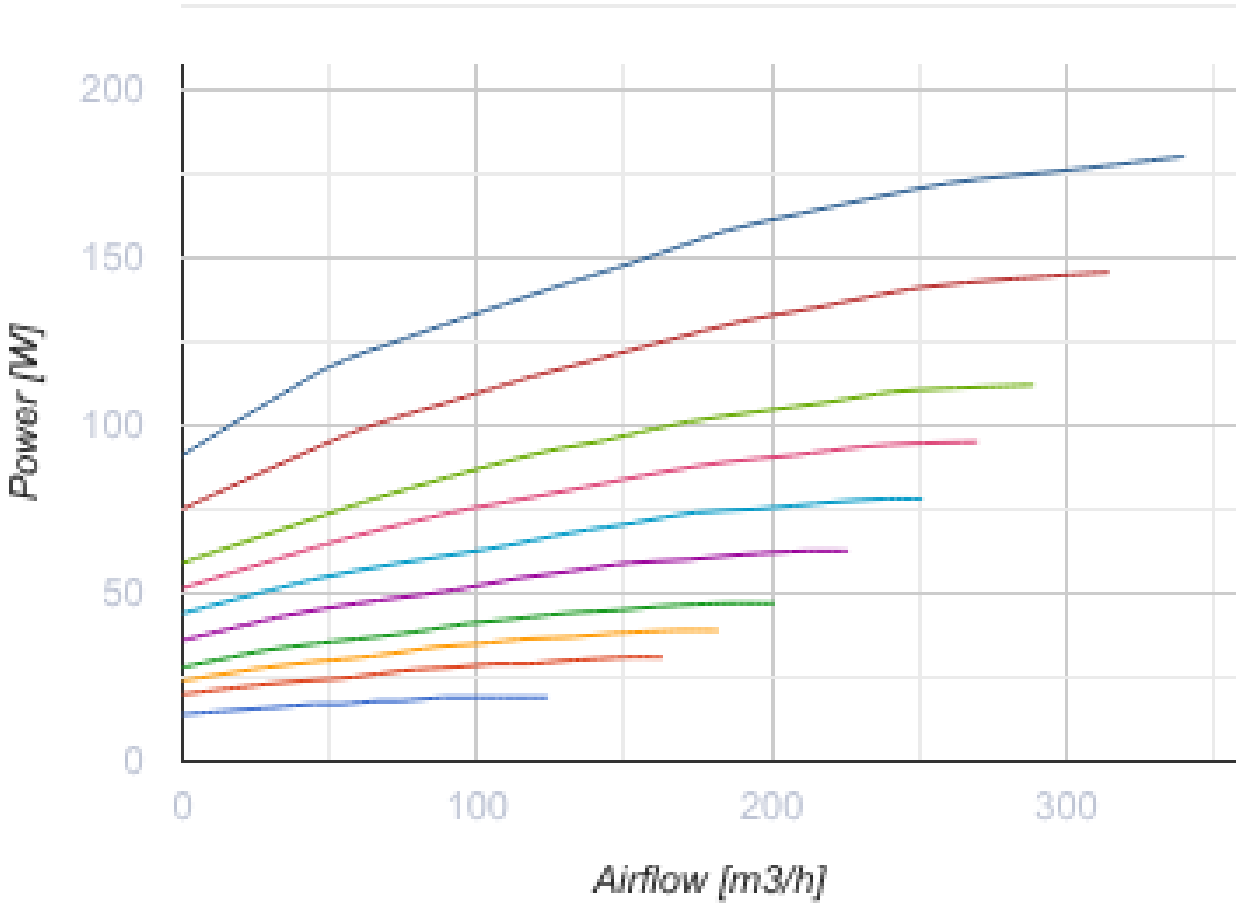


## Dimensions

| Ø D | B | B1 | H | L | L1 |
|---|---|---|---|---|---|
| 160 | 485 | 577 | 290 | 1238 | 1291 |

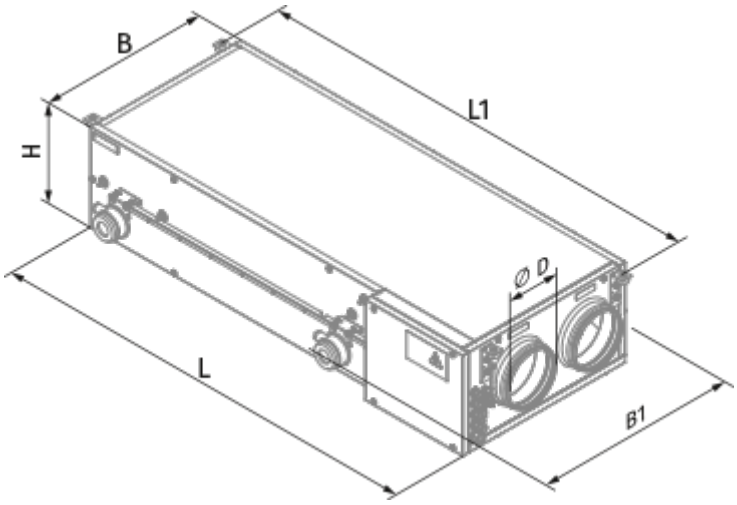
B
L1
H
Ø D
L
B1

## Ecodesign

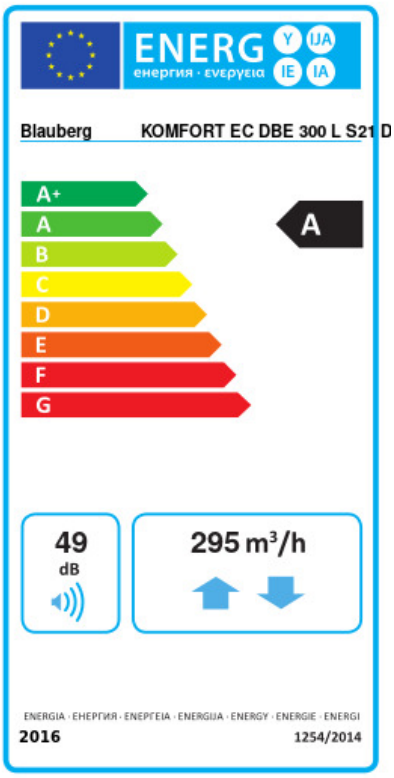


| Trademark | Blauberg | | | | | |
|---|---|---|---|---|---|---|
| Model | KOMFORT EC DBE 300 L S21 DTV | | | | | |
| Specific energy consumption (SEC) (kWh/(m²/a)) | Cold | | Average | | Warm | |
| | -75.7 | A+ | -39 | A | -15.3 | E |
| Type of ventilation unit | Bidirectional | | | | | |
| Type of drive installed | Variable speed | | | | | |
| Type of heat recovery system | Recuperative | | | | | |
| Thermal efficiency of heat recovery (%) | 76 | | | | | |
| Maximum flow rate (m³/h) | 295 | | | | | |
| Electric power input (W) | 174 | | | | | |
| Reference flow rate (m³/s) | 0.061 | | | | | |
| Reference pressure difference (Pa) | 50 | | | | | |
| Specific power input (SPI) (W/(m³/h)) | 0.35 | | | | | |
| Control typology | Local demand control | | | | | |
| Maximum internal leakage rates (%) | 2.7 | | | | | |
| Maximum external leakage rates (%) | 2.7 | | | | | |
| Declared typology | RVU BVU | | | | | |
| Sound power level (dB(A)) | 49 | | | | | |
| The annual electricity consumption (AEC) (kWh/a) | Cold | | Average | | Warm | |
| | 767 | | 230 | | 185 | |
| The annual heating saved (AHS) (kWh/a) | Cold | | Average | | Warm | |
| | 8614 | | 4403 | | 1991 | |

## Accessories

### Condensation drainage

| Name | Photo | Description |
|---|---|---|
| SFK 20x32 |  | Hydraulic syphon for condensate drainage |

### Electrical heaters

| Name | Photo | Description |
|---|---|---|

| | | |
|---|---|---|
| EVH 160-0.8-1 S21 V.2 |  | Electric duct preheater for heat exchanger freeze protection |
| EVH 160-1.2-1 S21 V.2 |  | Electric duct preheater for heat exchanger freeze protection |
| EVH 160-1.7-1 S21 V.2 |  | Electric duct preheater for heat exchanger freeze protection |
| EVH 160-2.0-1 S21 V.2 |  | Electric duct preheater for heat exchanger freeze protection |

### Control Panels

| Name | Photo | Description |
|---|---|---|
| S25 |  | LCD control panel |
| S22 |  | Control panels |
| S22 Wi-Fi |  | Control panels |

### CO2 sensors

| Name | Photo | Description |
|---|---|---|
| CD-1 |  | CO2 sensors |
| CD-2 |  | CO2 sensors |

### Humidity sensors

| Name | Photo | Description |
|---|---|---|
| FS2 |  | Humidity sensor |

### Other accessories

| Name | Photo | Description |
|---|---|---|

| | | |
|---|---|---|
| FP 440x128x20 G4 |  | G4 panel filter |
| FPT 208x236x27 F7 | | |
| FPT 208x236x27 G4 | | |

### Electric actuators

| Name | Photo | Description |
|---|---|---|
| Belimo TF230 |  | Electric actuators |