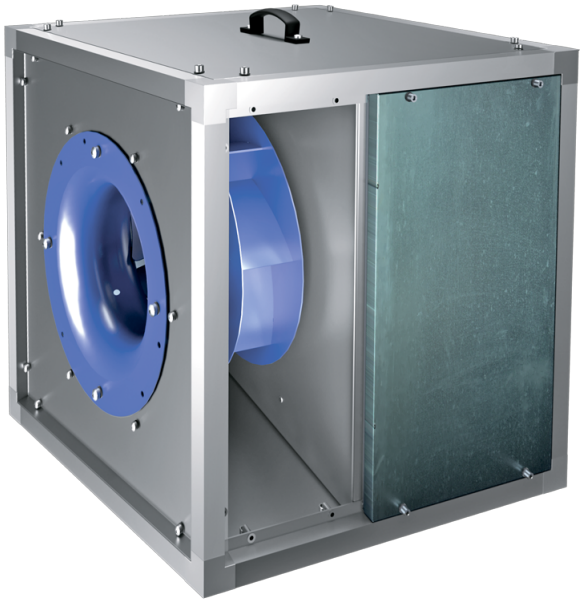

Iso-VK 450 4E

Kitchen inline fans in sound-insulated casings with operational temperature of 120 °C

- Sound-insulated casing
- Impeller type: Centrifugal impeller with backward curved blades
- Casing material: Aluzinc
- Installation in any position

	Unit of measurement	Iso-VK 450 4E
Phases	-	1
Maximum supply voltage	V	230
Minimum supply voltage	V	230
Power supply frequency	Hz	50
Maximum airflow	m^3/h	5920
Weight	kg	71.8
Transported air temperature (max)	°C	120
Transported air temperature (min)	°C	-25
Maximum transported air temperature	-	120°C CONTINUOUS
Ingress protection rating	-	IPX4
Impeller material	-	Steel
Size	mm	450

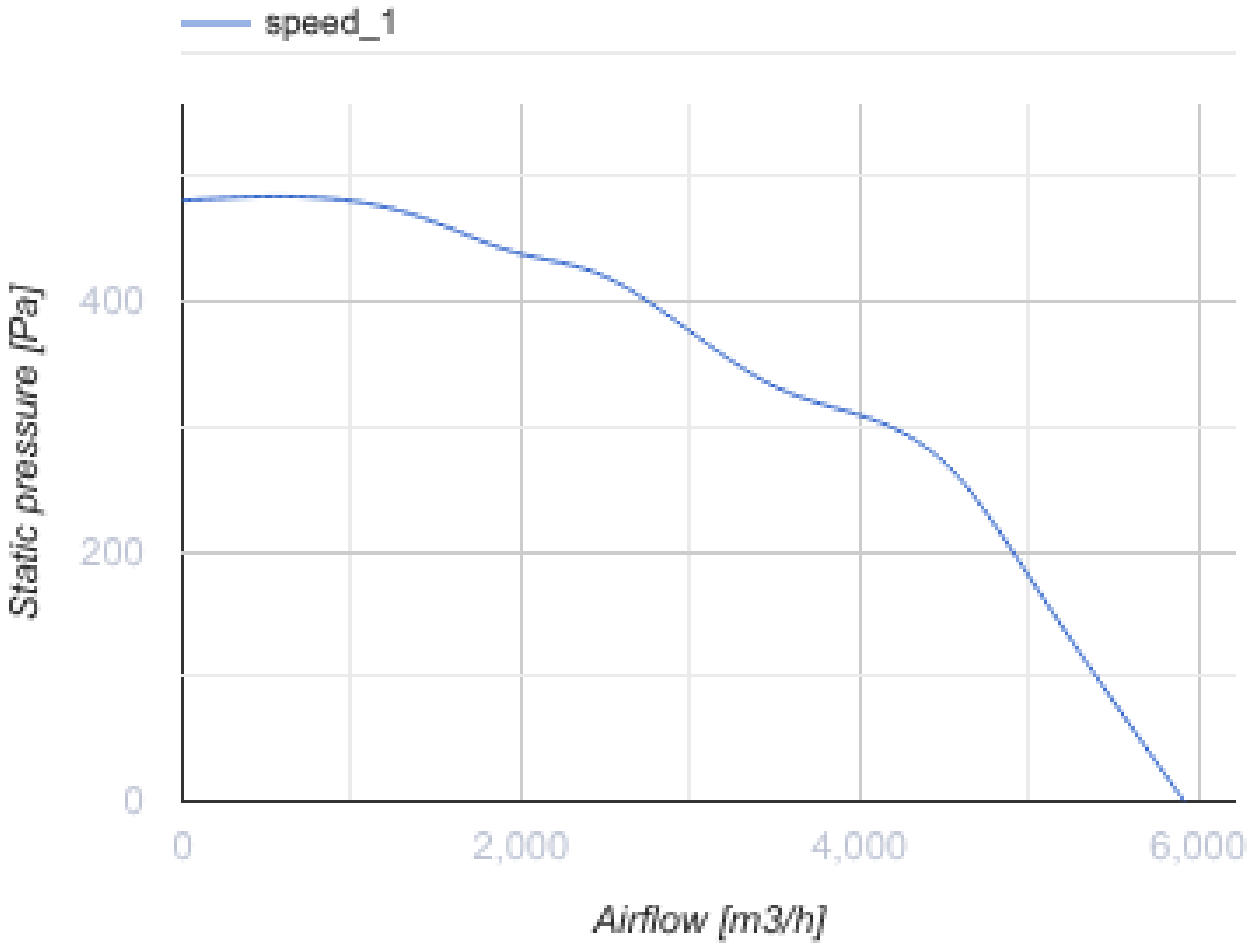
speed_1
Static pressure [Pa]
400
200
0
0
2,000
4,000
6,000
Airflow [m3/h]

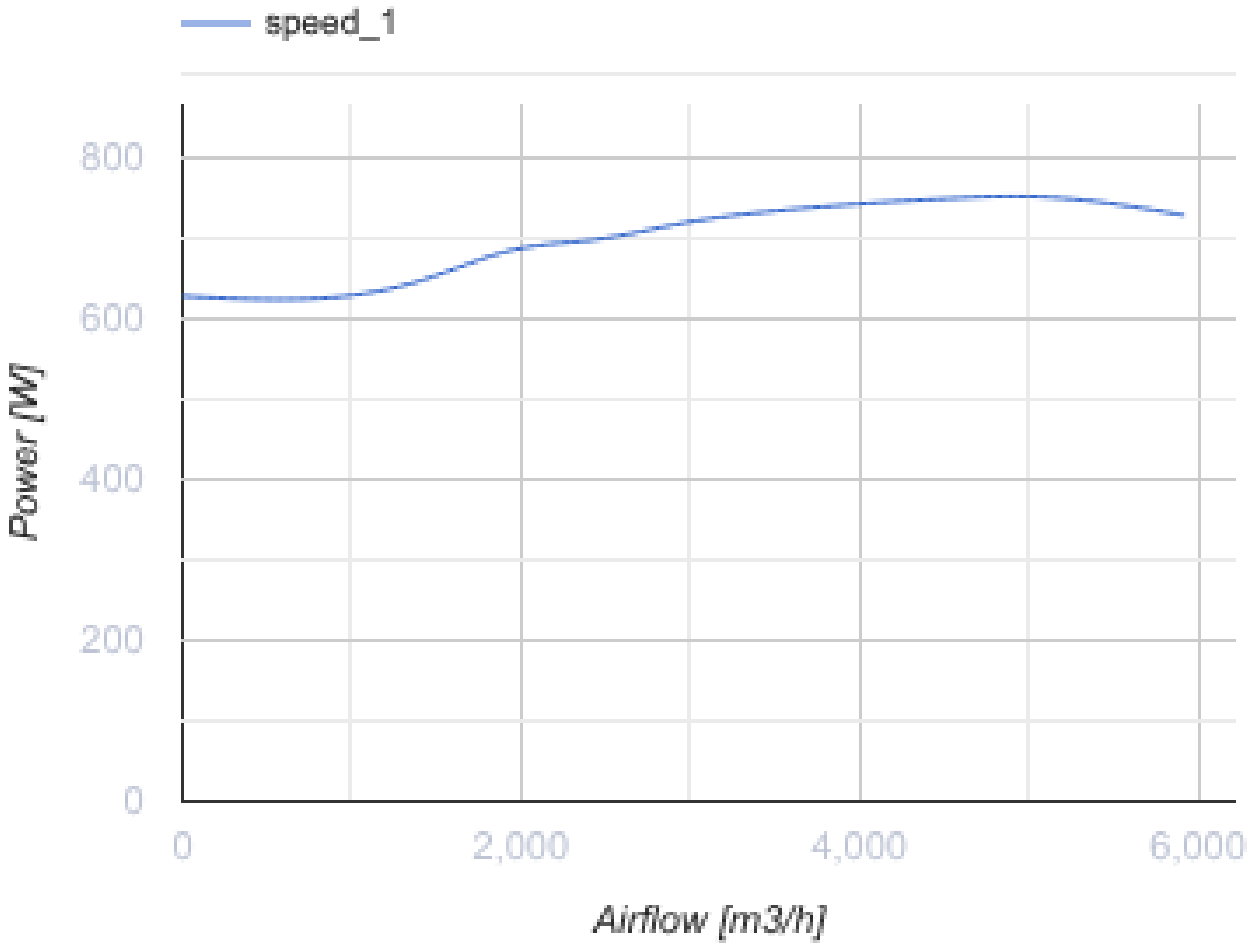

Dimensions

H	H1	H2	L	L1	W	W1	W2
700	738	640	700	738	700	738	282

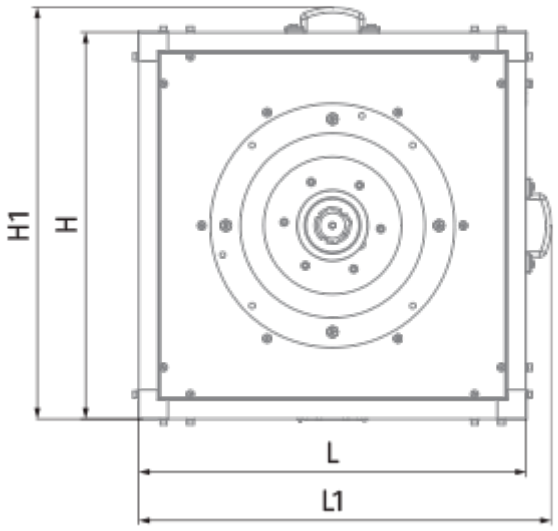
H1
H
L
L1

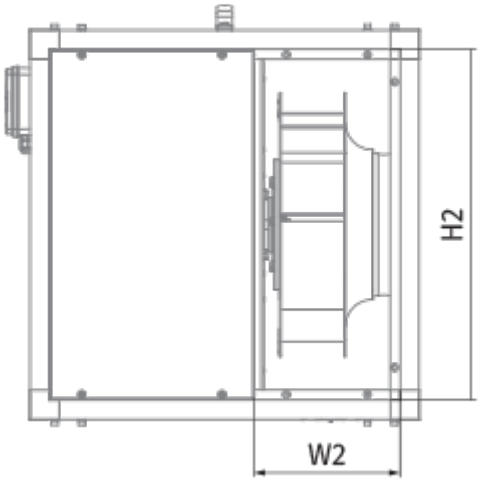
H2
W2

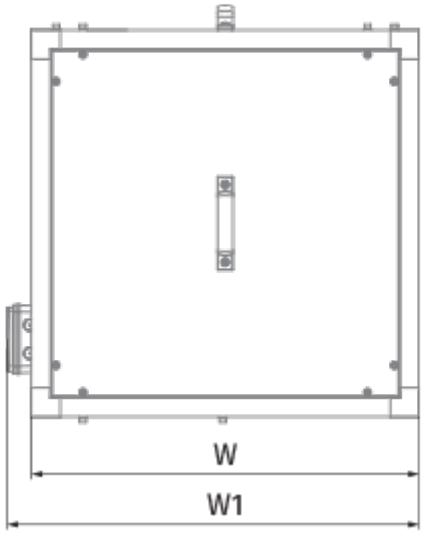
W
W1