

Iso-Mix 250 FR1

Mixed-flow inline fans in sound-insulated casings

- Sound-insulated casing
- Control: Built-in speed controller
- Impeller type: Mixed-flow
- Casing material: Coated steel
- Installation in any position
- Cable with mains plug

	Unit of measurement	Iso-Mix 250 FR1	
Speed	-	1	2
Phases	-	1	
Maximum supply voltage	V	230	
Minimum supply voltage	V	230	
Power supply frequency	Hz	50/60	
Maximum airflow	m³/h	1035	1315
Weight	kg	15	
Transported air temperature (max)	°C	60	
Ingress protection rating	-	IPX4	
Ingress protection rating of the drive	-	IP44	
Impeller material	-	Plastic	

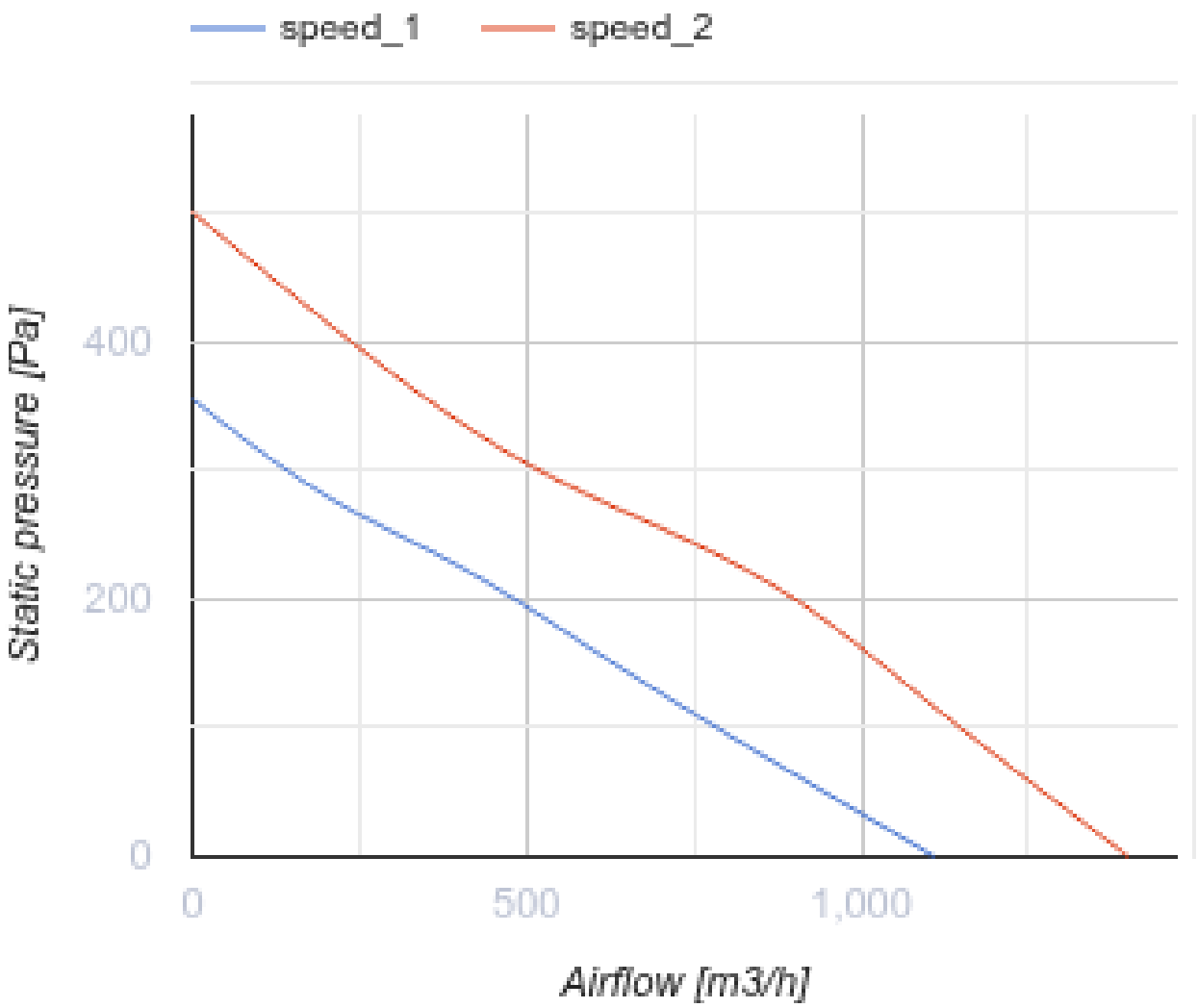
speed_1
speed_2
Static pressure [Pa]
400
200
0
0
500
1,000
Airflow [m3/h]

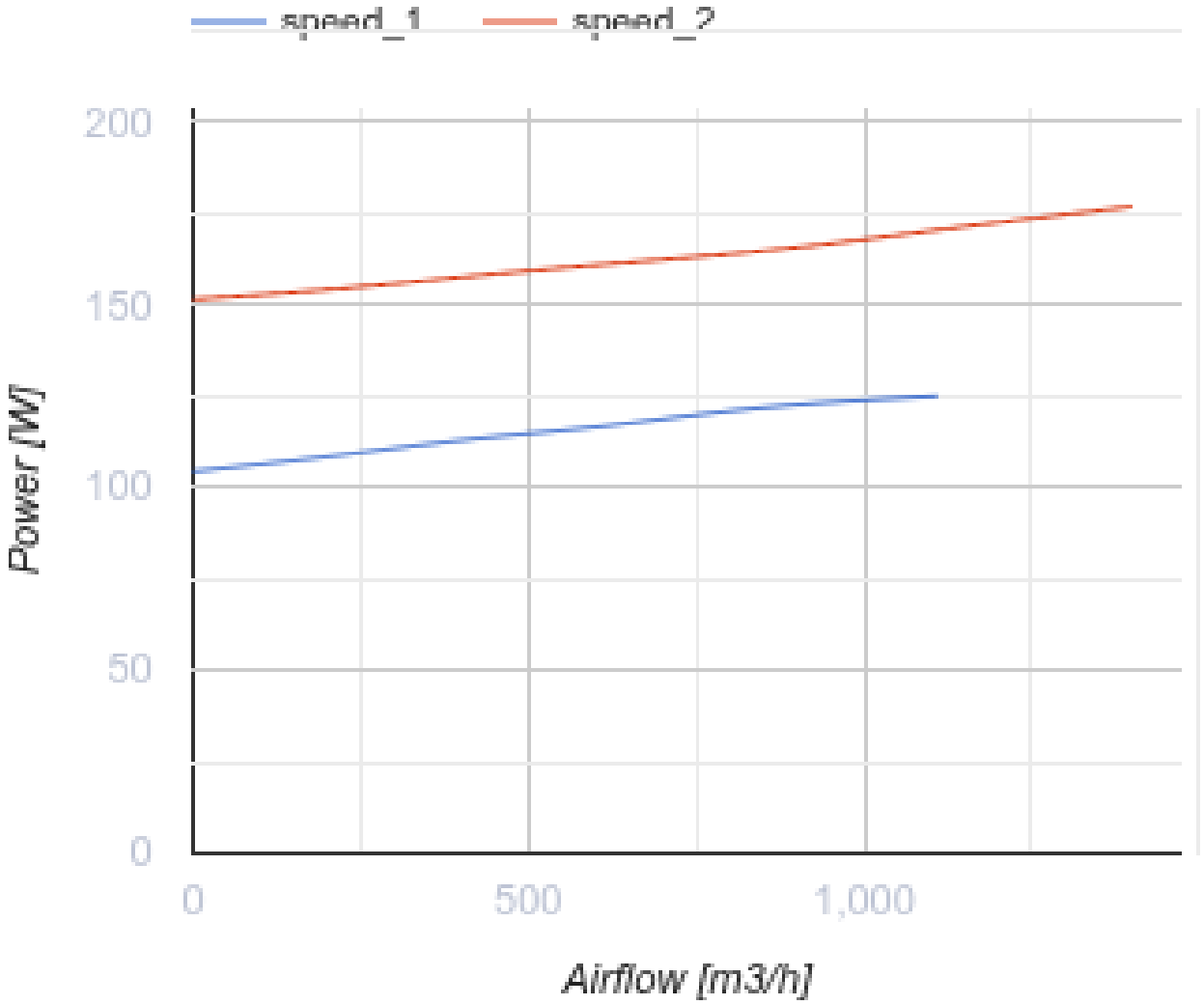

Dimensions

Ø D	H	L	L1	W	W1
248	360	665	130	445	370

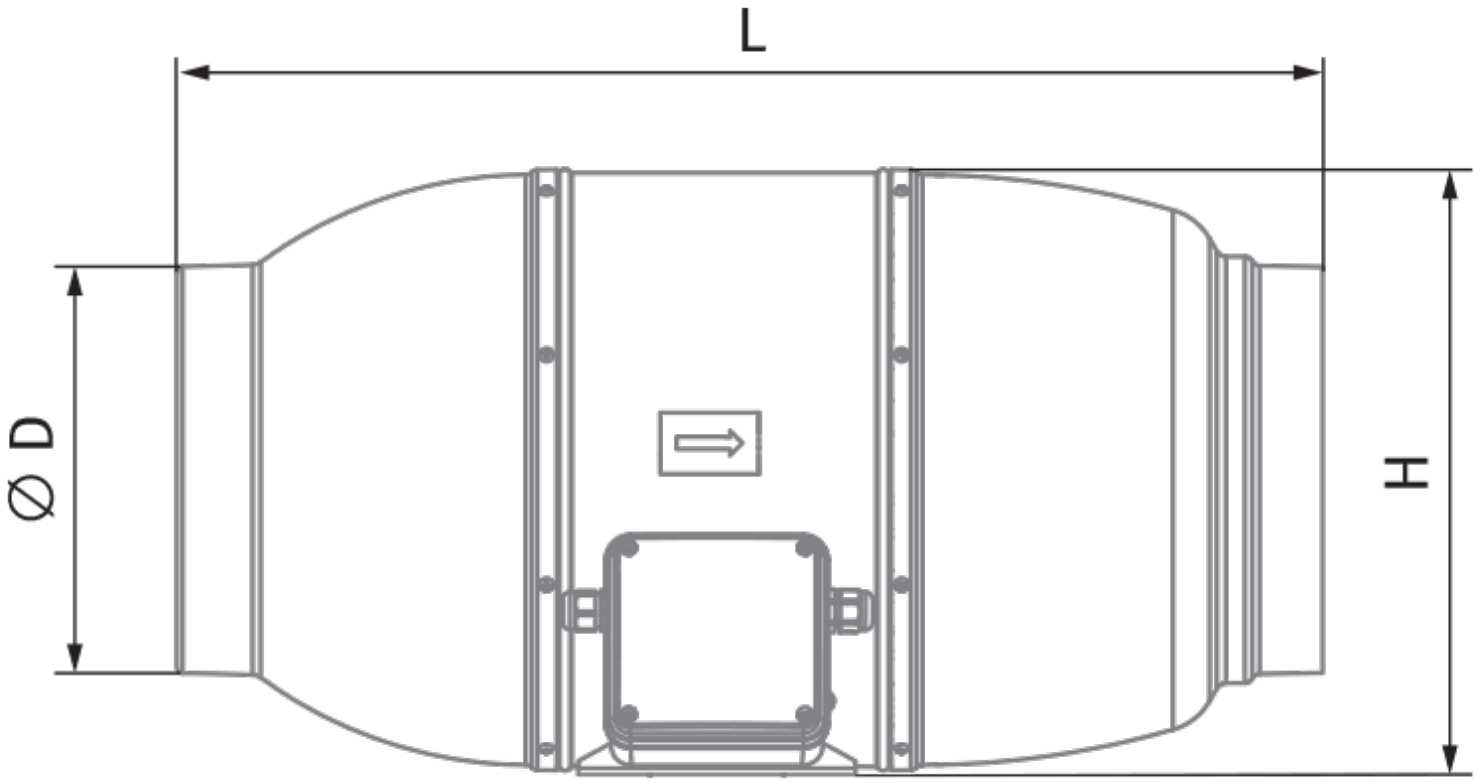
L
⌀ D
H

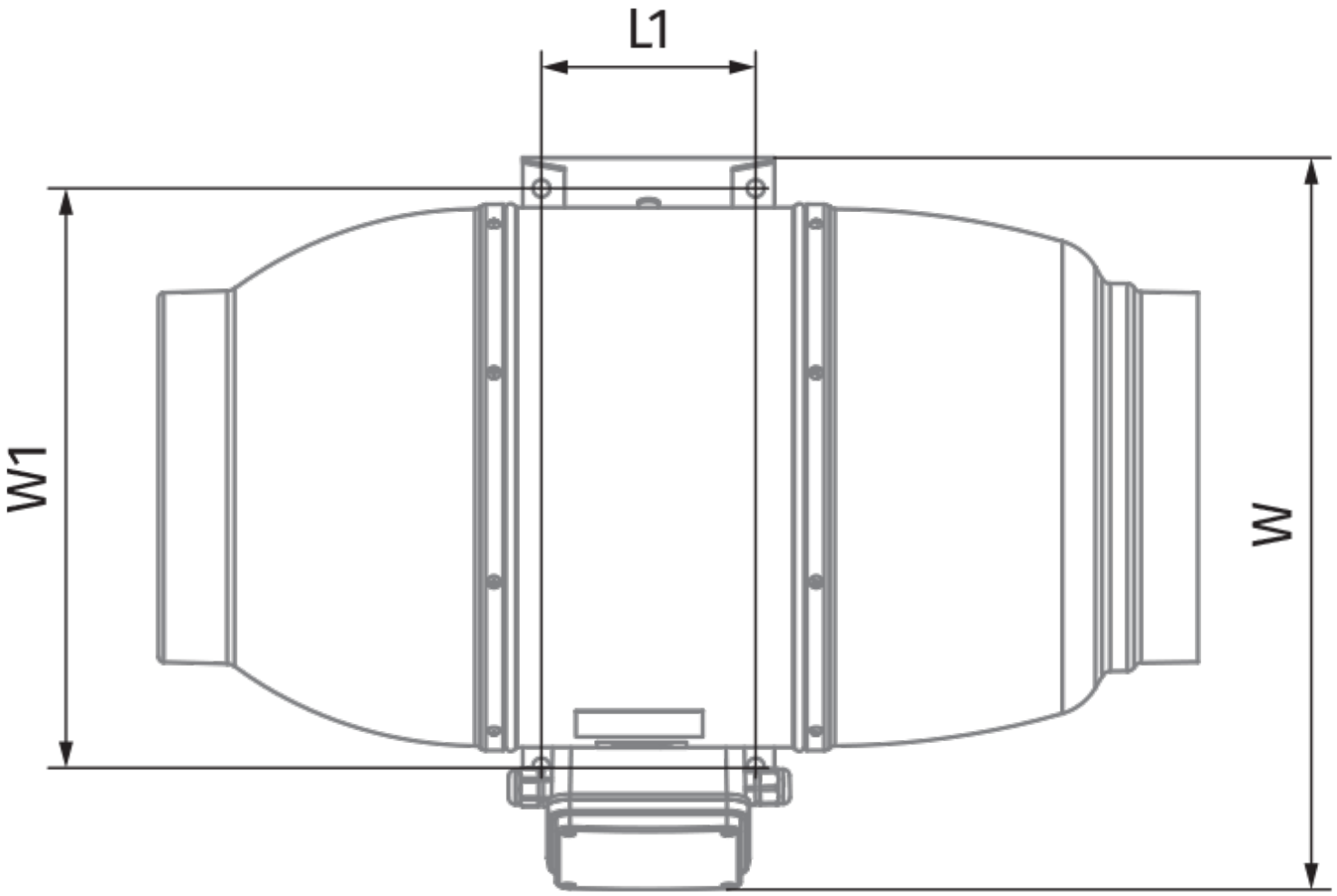
L1
W1
W

Ecodesign

Trademark	Blauberg
Model	Iso-Mix 250 FR1
Type of ventilation unit	Unidirectional
Type of drive installed	External MSD or VSD
Type of heat recovery system	None
Nominal external pressure (Pa)	236
Maximum external leakage rates (%)	2.7
Static efficiency (%)	30.9
Sound power level (dB(A))	56
Declared typology	NRVU UVU
Effective electric power input (kW)	0.174