

Hybrid R S21

Centralised ventilation unit for small apartments

- Sound pressure level LpA at 1 m: 42
- Heat exchanger type: Counter flow
- Heat exchanger material: Polystyrene
- Sound-insulated casing
- Bypass: Auto
- BMS protocol: ModBus
- Control: Wireless control panel, Smartphone, Built-in control panel
- Casing material: Galvanized steel
- Humidity sensor: Optional
- CO2 sensor: Optional
- PM2.5 sensor: Optional
- Temperature sensor: Built-in

	Unit of measurement	Hybrid R S21		
Phases	-	1		
Minimum supply voltage	V	230		
Maximum supply voltage	V	230		
Power supply frequency	Hz	50/60		
Maximum airflow	m³/h	60	90	160
Sound pressure level LpA at 1 m	dB(A)	42		
Heat recovery efficiency, max	%	95		
Heat exchanger type	-	Counter flow		
Heat exchanger material	-	Polystyrene		
Weight	kg	31		
Transported air temperature (max)	°C	40		
Transported air temperature (min)	°C	-25		
Minimum wall thickness	mm	70		
Maximum wall thickness	mm	2000		

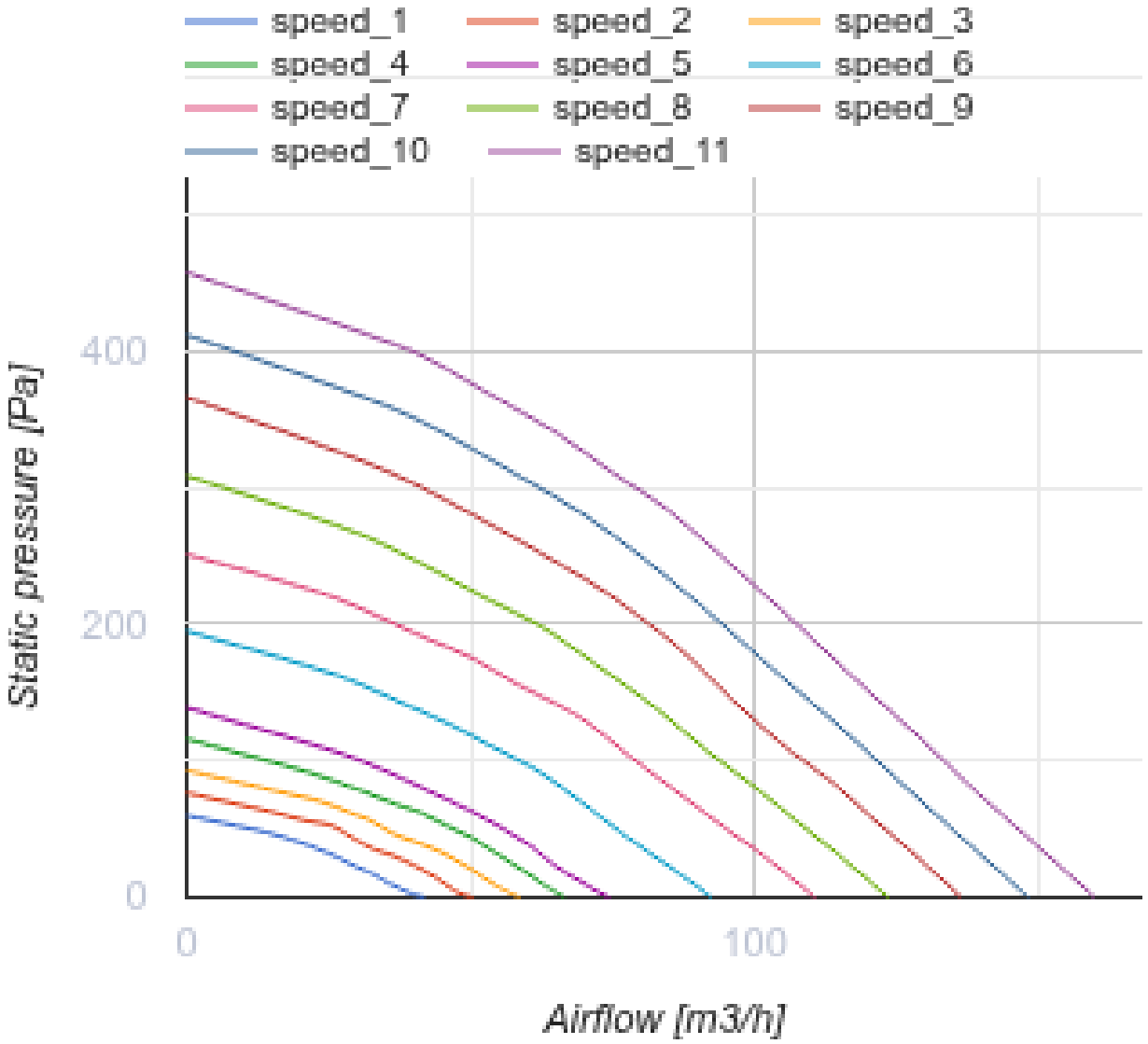
speed_1
speed_2
speed_3
speed_4
speed_5
speed_6
speed_7
speed_8
speed_9
speed_10
speed_11
400
200
0
Static pressure [Pa]
0
100
Airflow [m3/h]

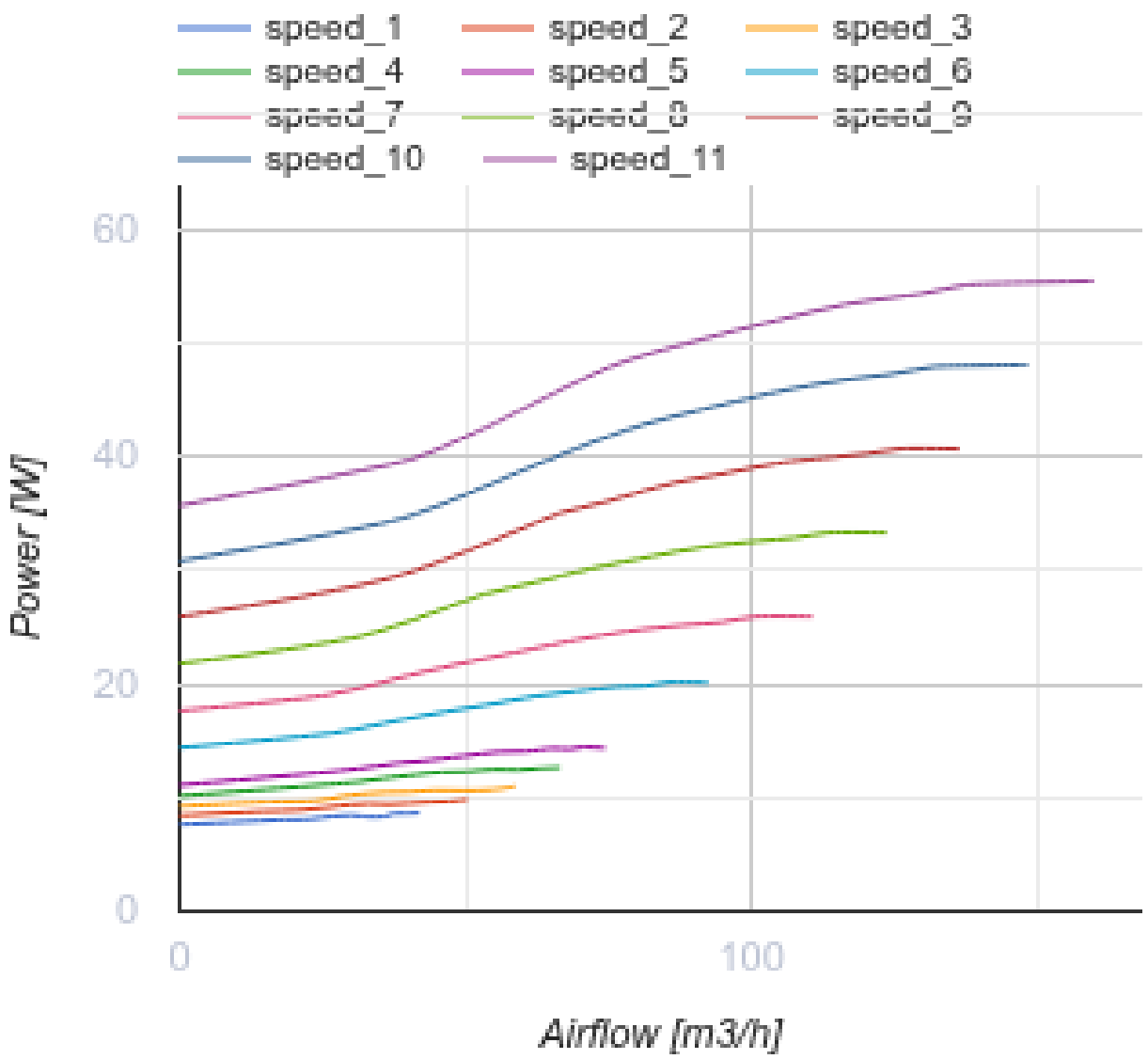
speed_1
speed_2
speed_3
speed_4
speed_5
speed_6
speed_7
speed_8
speed_9
speed_10
speed_11
60
40
20
0
Power [W]
0
100
Airflow [m3/h]

Dimensions

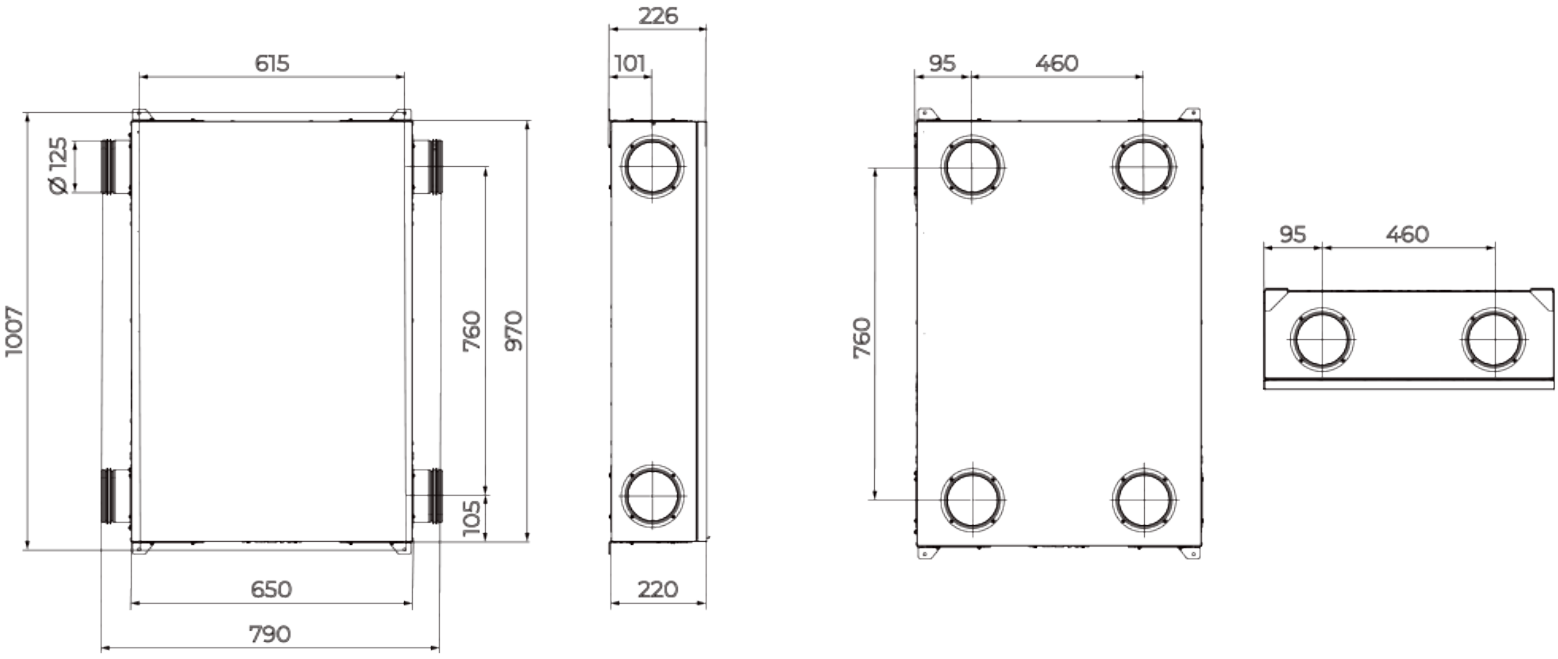

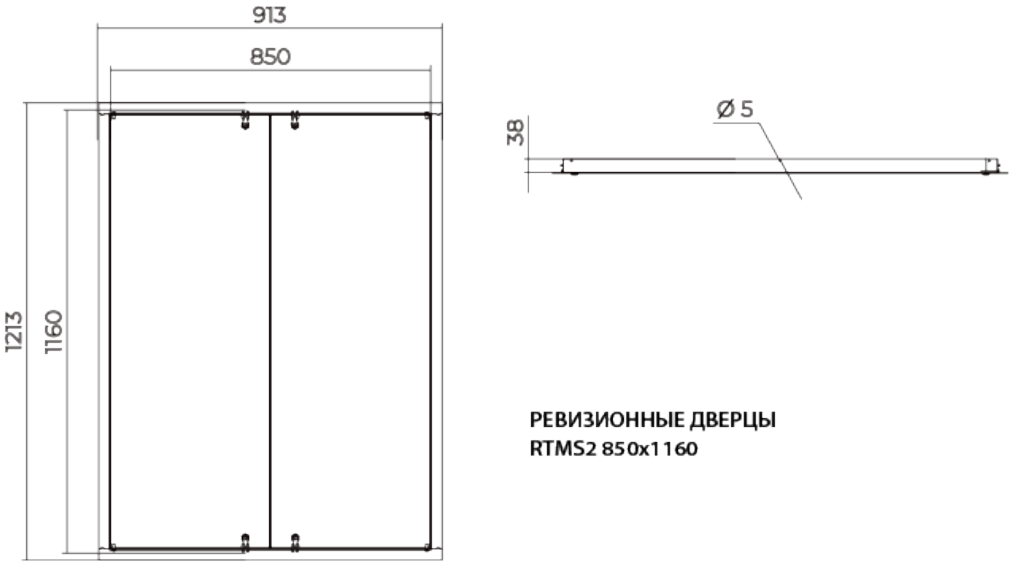

РЕВИЗИОННЫЕ ДВЕРЦЫ
RTMS2 850x1160

Ecodesign

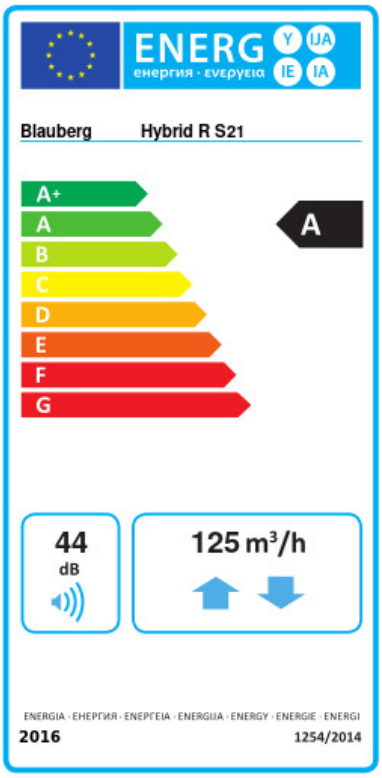

Trademark	Blauberg					
Model	Hybrid R S21					
Specific energy consumption (SEC) (kWh/(m²/a))	Cold		Average		Warm	
	-78.8	A+	-41	A	-16.8	E
Type of ventilation unit	Bidirectional					
Type of drive installed	Variable speed					
Type of heat recovery system	Recuperative					
Thermal efficiency of heat recovery (%)	81					
Maximum flow rate (m³/h)	125					
Electric power input (W)	52					
Reference flow rate (m³/s)	0.027					
Reference pressure difference (Pa)	50					
Specific power input (SPI) (W/(m³/h))	0.271					
Control typology	Local demand control					
Maximum internal leakage rates (%)	2.7					
Maximum external leakage rates (%)	2.7					
Airflow sensitivity at +20 Pa and -20 Pa (%)	0					
Declared typology	RVU BVU					
Sound power level (dB(A))	44					
The annual electricity consumption (AEC) (kWh/a)	Cold		Average		Warm	
	725		188		143	
The annual heating saved (AHS) (kWh/a)	Cold		Average		Warm	
	8817		4507		2038	