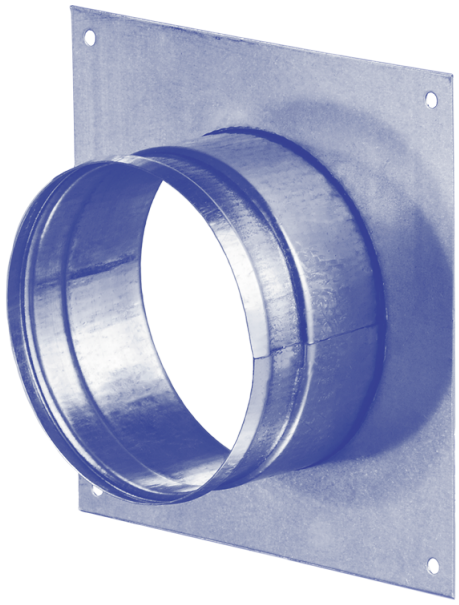

FQZ 100

Spigot with a plate for round ducts

- Casing material: Galvanized steel

	Unit of measurement	FQZ 100

Dimensions

Ø D	a	b	L
100	150 × 150	134 × 134	50

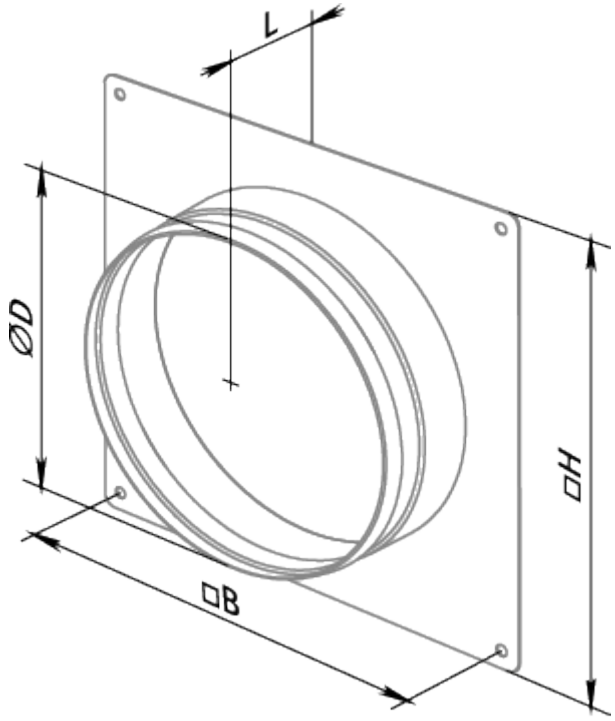
L
ØD
□H
□B