

# FQM 250

Spigot with a plate for round ducts

- Casing material: Coated steel

| | Unit of measurement | FQM 250 |
|---|---|---|

## Dimensions

| Ø D | a | b | L |
|---|---|---|---|
| 250 | 300 × 300 | 284 × 284 | 50 |

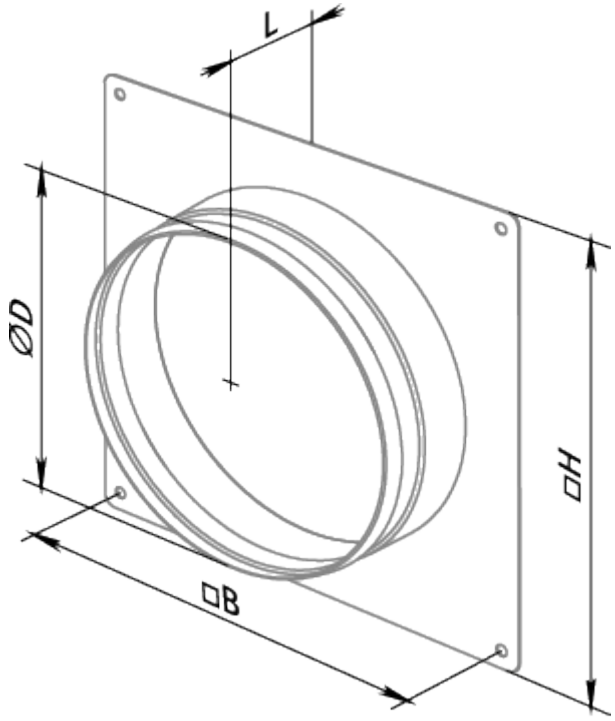
L
ØD
□H
□B