

EVH 125-0.6-1

Electric duct preheater for heat exchanger freeze protection

• Casing material: Galvanized steel

	Unit of measurement	EVH 125-0.6-1
Phases	-	1
Minimum supply voltage	V	230
Maximum supply voltage	V	230
Power supply frequency	Hz	50/60

Dimensions

ØD	B	H	L	L1
124	155	251	306	190

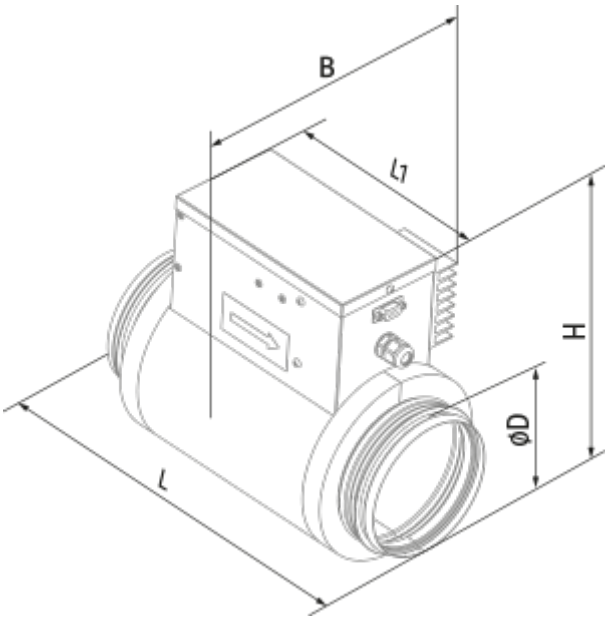
B
l1
H
ϕD
L