

CIVIC EC D1B 300 S21 V.2

The CIVIC EC DB V.2 units are designed for single-room ventilation of schools, offices and other public and commercial premises

- Sound pressure level LpA at 1 m: 44
- Heat exchanger type: Counter flow
- Heat exchanger material: Polystyrene
- Sound-insulated casing
- Bypass: Auto
- BMS protocol: ModBus
- Control: Smartphone
- Casing material: Coated steel
- Humidity sensor: Optional
- CO2 sensor: Optional
- PM2.5 sensor: Optional
- Temperature sensor: Built-in

	Unit of measurement	CIVIC EC D1B 300 S21 V.2
Phases	-	1
Minimum supply voltage	V	230
Maximum supply voltage	V	230
Power supply frequency	Hz	50/60
Maximum airflow	m³/h	300
Sound pressure level LpA at 1 m	dB(A)	44
Heat recovery efficiency, max	%	92
Heat exchanger type	-	Counter flow
Heat exchanger material	-	Polystyrene
Weight	kg	78
Transported air temperature (max)	°C	40
Transported air temperature (min)	°C	-25
Ambient air temperature min	°C	1
Ambient air temperature max	°C	40
Ingress protection rating	-	IP20
Ingress protection rating of the drive	-	IP44
Ambient air humidity max	%	60
Minimum wall thickness	mm	100
Maximum wall thickness	mm	2000

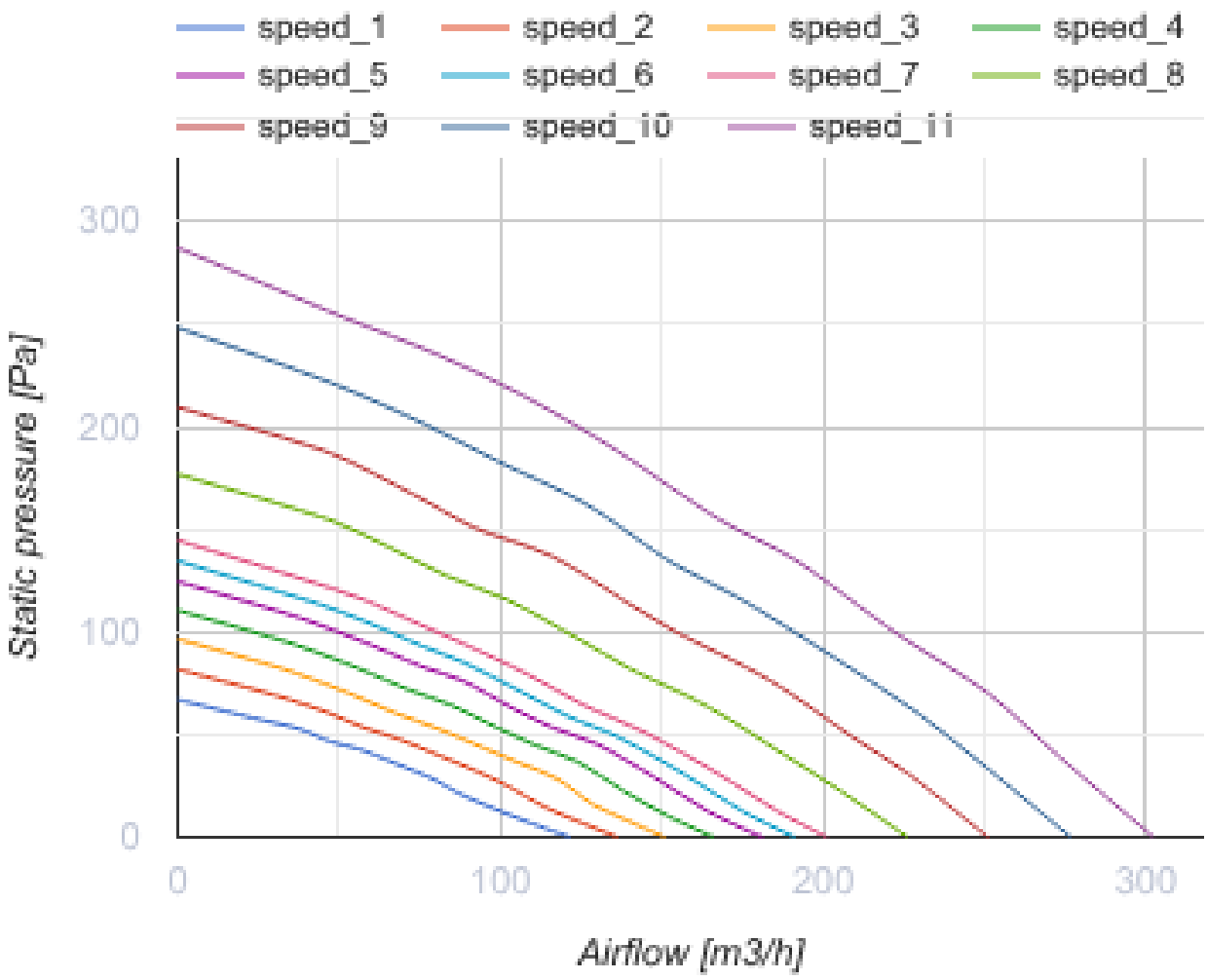
speed_1
speed_2
speed_3
speed_4
speed_5
speed_6
speed_7
speed_8
speed_9
speed_10
speed_11
300
200
100
0
Static pressure [Pa]
0
100
200
300
Airflow [m3/h]

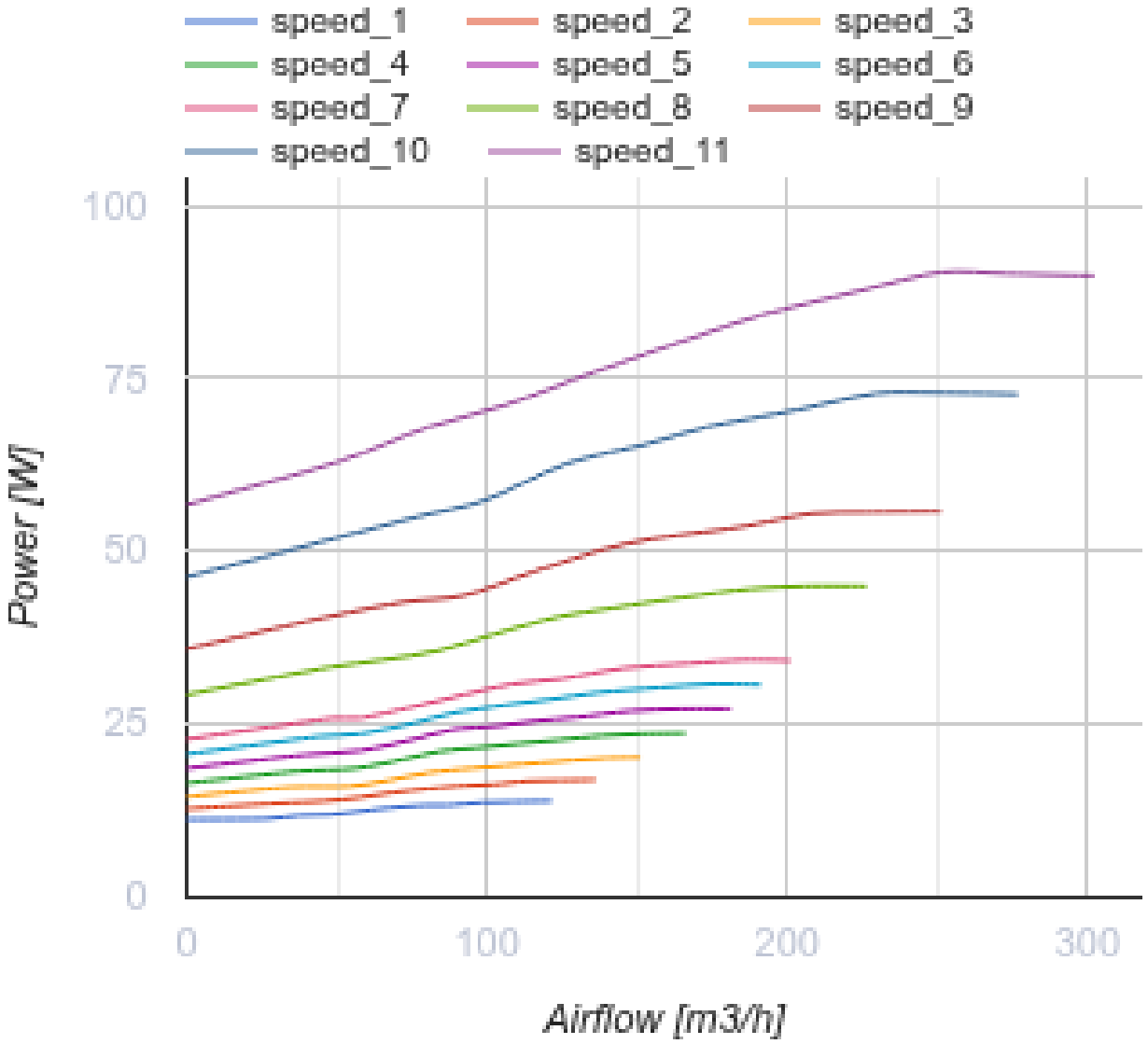

Dimensions

ØD	H	H1	H2	L	L1	L2	L3	L4	W / B	W1 / B1	W2 / B2	W3 / B3
200	402	450	45	1200	764	218	1122	445	1139	181	530	281

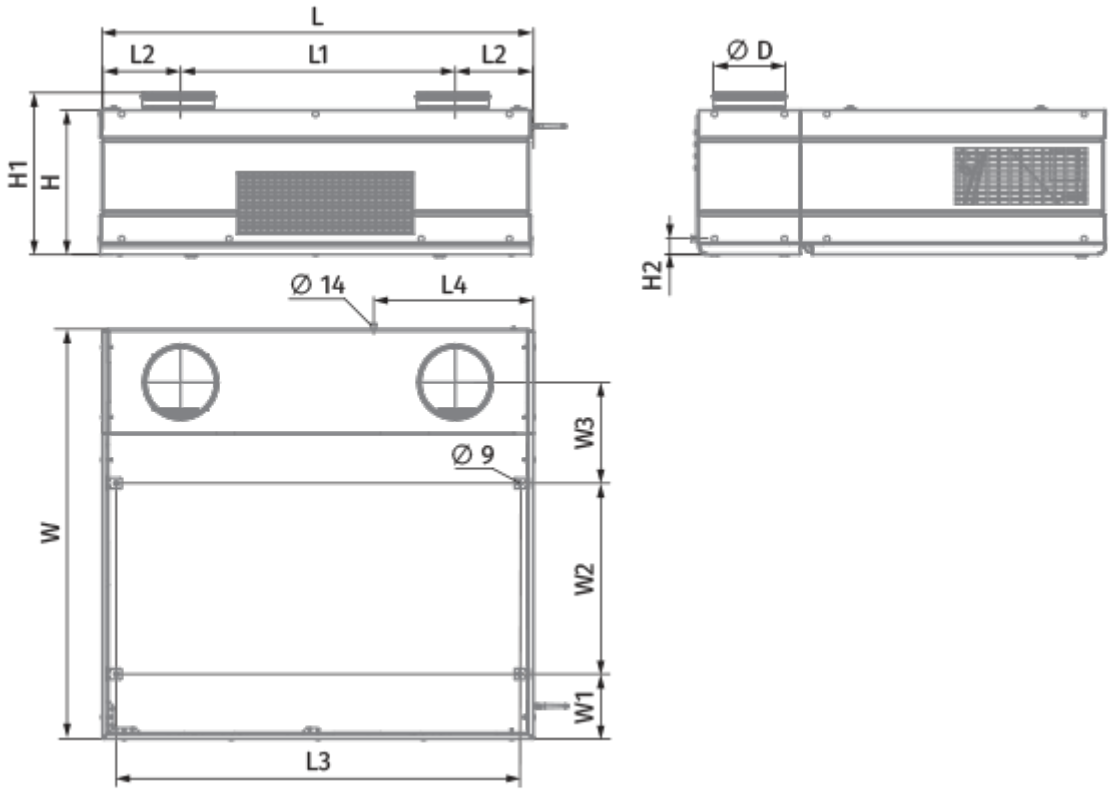

Accessories

Condensation drainage

Name	Photo	Description
SFK 20x32		Hydraulic syphon for condensate drainage
CP-2		Drain pump

Control Panels

Name	Photo	Description
S25		LCD control panel
S22		Control panels
S22 Wi-Fi		Control panels

CO2 sensors

Name	Photo	Description
CD-1		CO2 sensors
CD-2		CO2 sensors

Humidity sensors

Name	Photo	Description
FS2		Humidity sensor
HR-S		Electro-mechanical humidistat
DPWC11200		Humidity and temperature sensor

VOC sensors

Name	Photo	Description
DPWQ30600		VOC sensor
DPWQ40200		CO2 sensor

Other accessories

Name	Photo	Description
FP 320x211x48 F7		F7 panel filter
FP 320x373x48 G4		G4 panel filter

Cooker Hoods

Name	Photo	Description

VDC Civic 300 DB		Module of vertical duct connection