

Centro-MZ EC 250

Inline centrifugal fans

• Impeller type: Centrifugal impeller with backward curved blades
• Casing material: Galvanized steel
• Installation in any position

	Unit of measurement	Centro-MZ EC 250
Phases	-	1
Maximum supply voltage	V	230
Minimum supply voltage	V	230
Power supply frequency	Hz	50/60
Maximum airflow	m^3/h	1300
Weight	kg	4.5
Transported air temperature (max)	°C	60
Transported air temperature (min)	°C	-25
Ingress protection rating	-	IPX4
Impeller material	-	Plastic

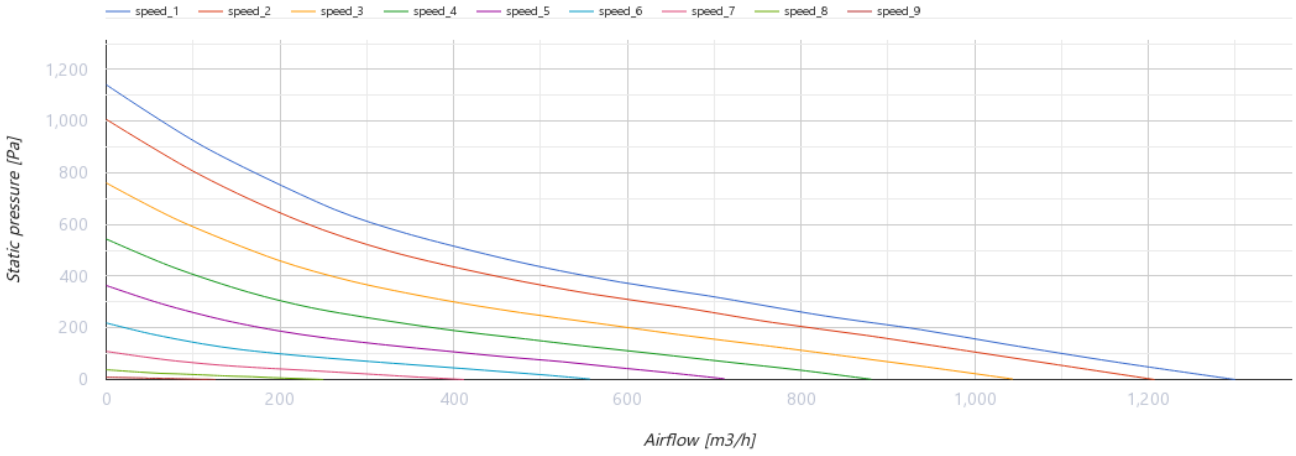

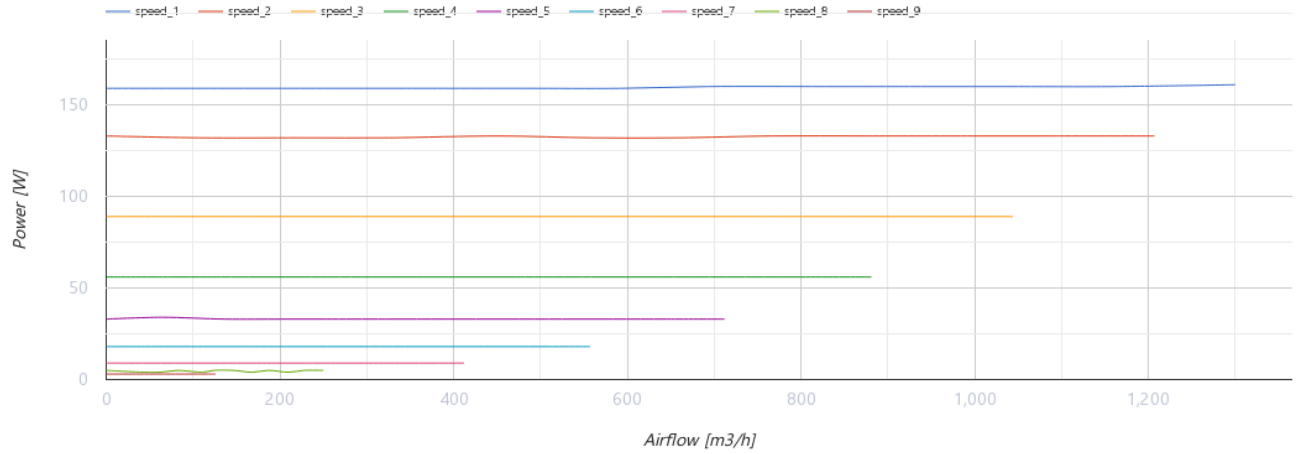

Dimensions

Ø D	Ø D1	H	L	L1	L2
248	345	400	245	25	30

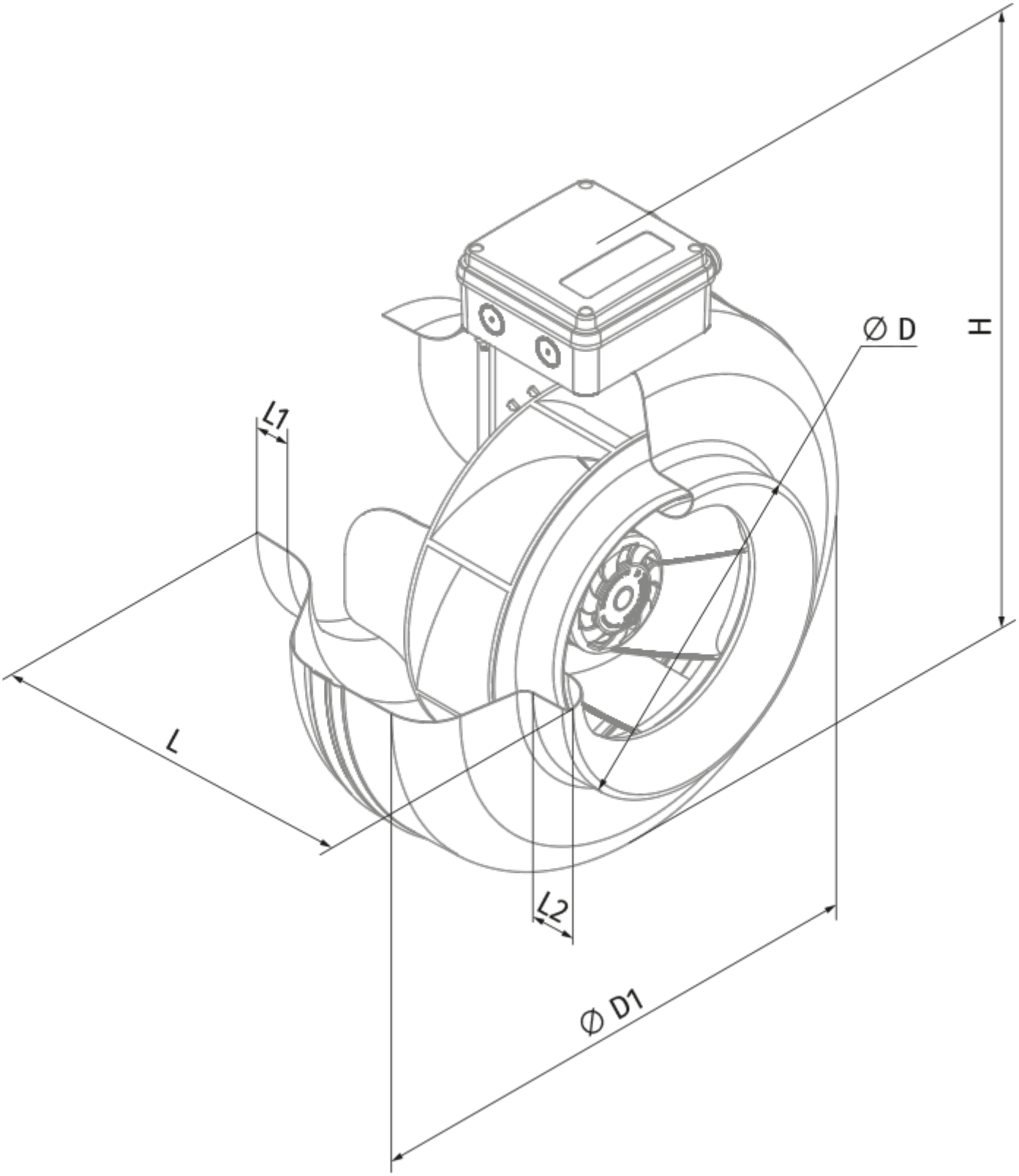
Ø D
H
L1
L
L2
Ø D1