

Centro 125 V2 VW1

Centrifugal inline fans in plastic casings

• Control: Built-in speed controller
• Impeller type: Centrifugal impeller with backward curved blades
• Casing material: Polypropylene
• Installation in any position
• Cable with mains plug

	Unit of measurement	Centro 125 V2 VW1	
Speed	-	1	2
Phases	-	1	
Maximum supply voltage	V	230	
Minimum supply voltage	V	230	
Power supply frequency	Hz	50	
Maximum airflow	m³/h	191	329
Weight	kg	2.2	
Transported air temperature (max)	°C	55	
Transported air temperature (min)	°C	-25	
Ingress protection rating	-	IPX4	
Ingress protection rating of the drive	-	IP44	
Impeller material	-	Plastic	

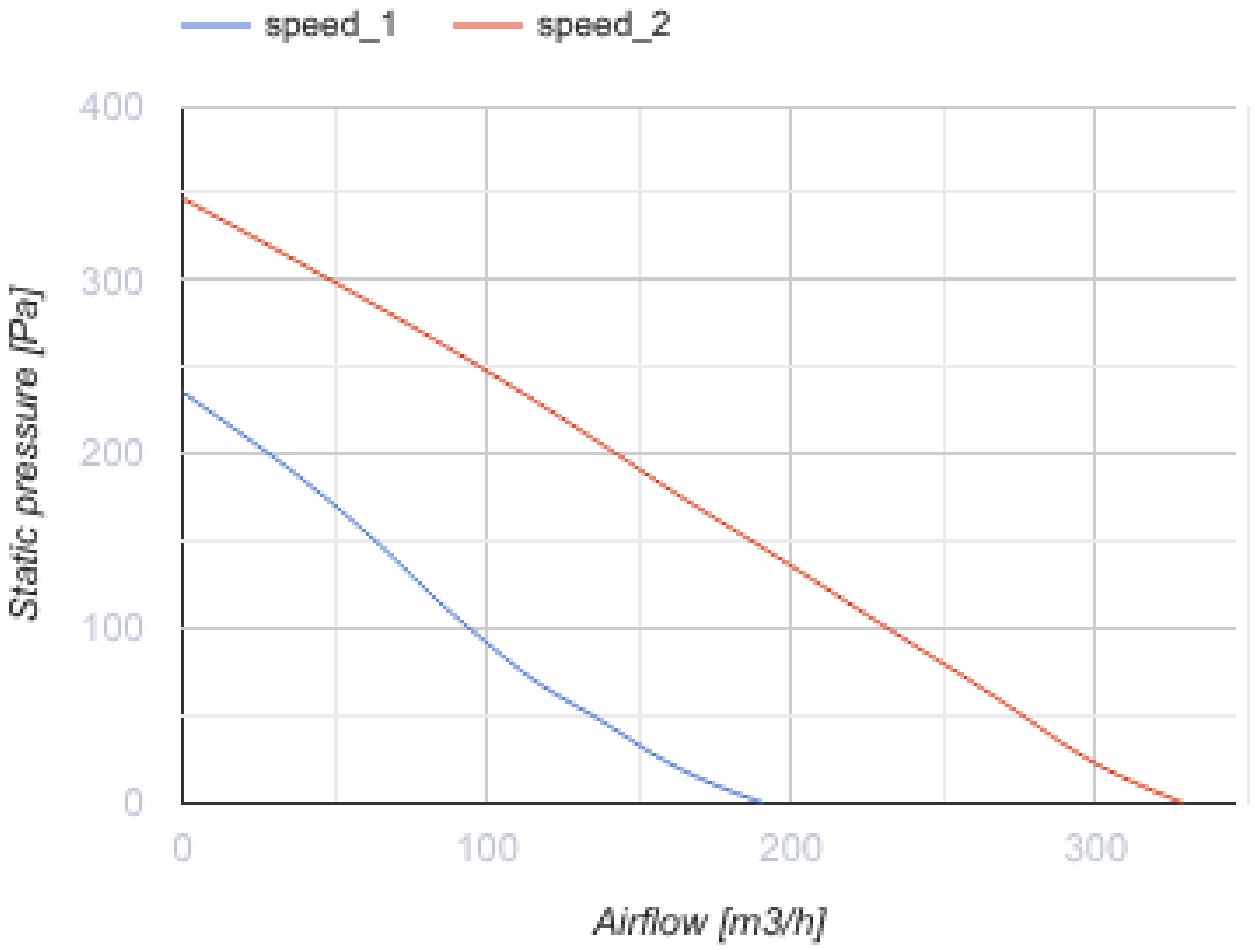
speed_1
speed_2
400
300
200
100
0
Static pressure [Pa]
0
100
200
300
Airflow [m3/h]

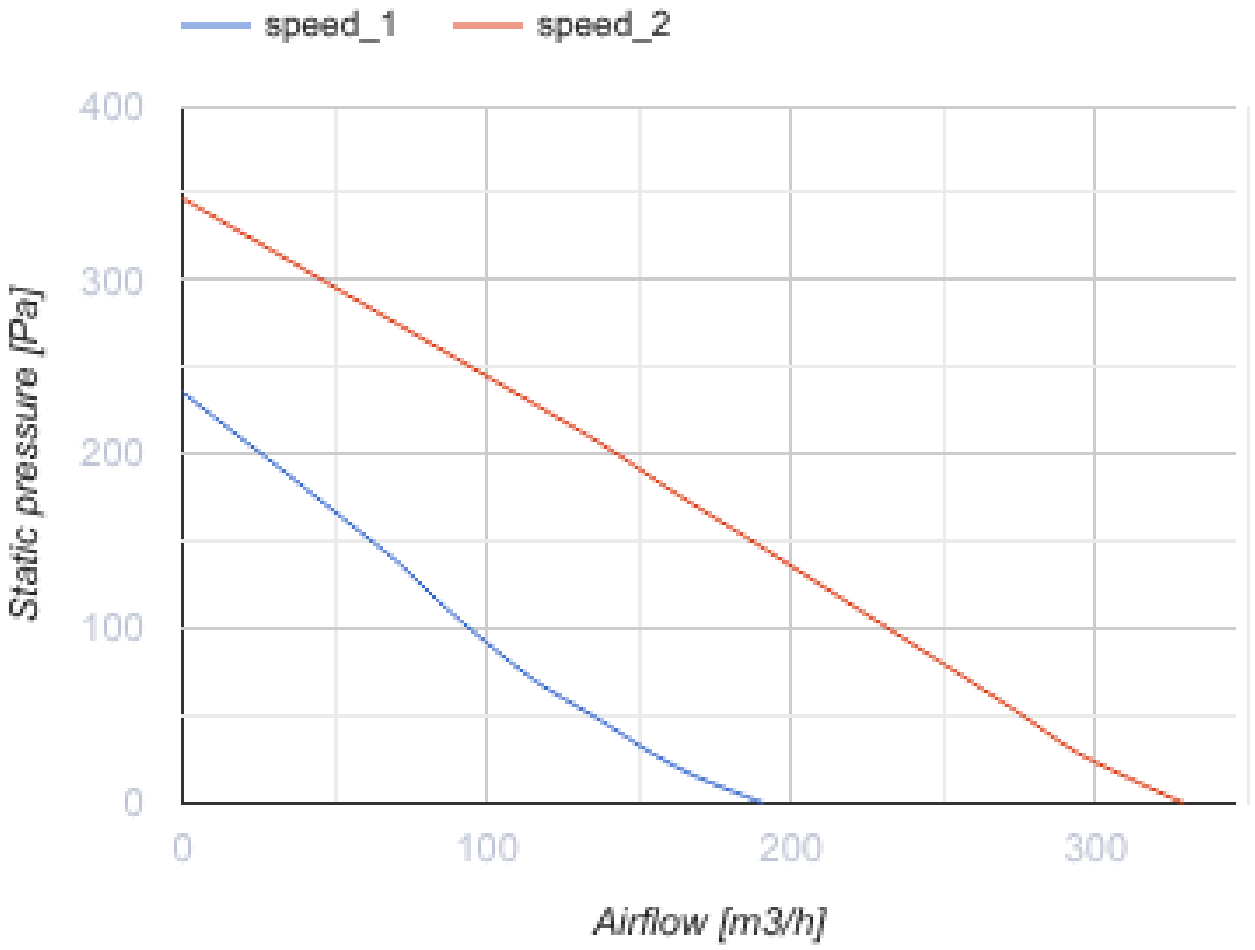
speed_1
speed_2
400
300
200
100
0
Static pressure [Pa]
0
100
200
300
Airflow [m3/h]

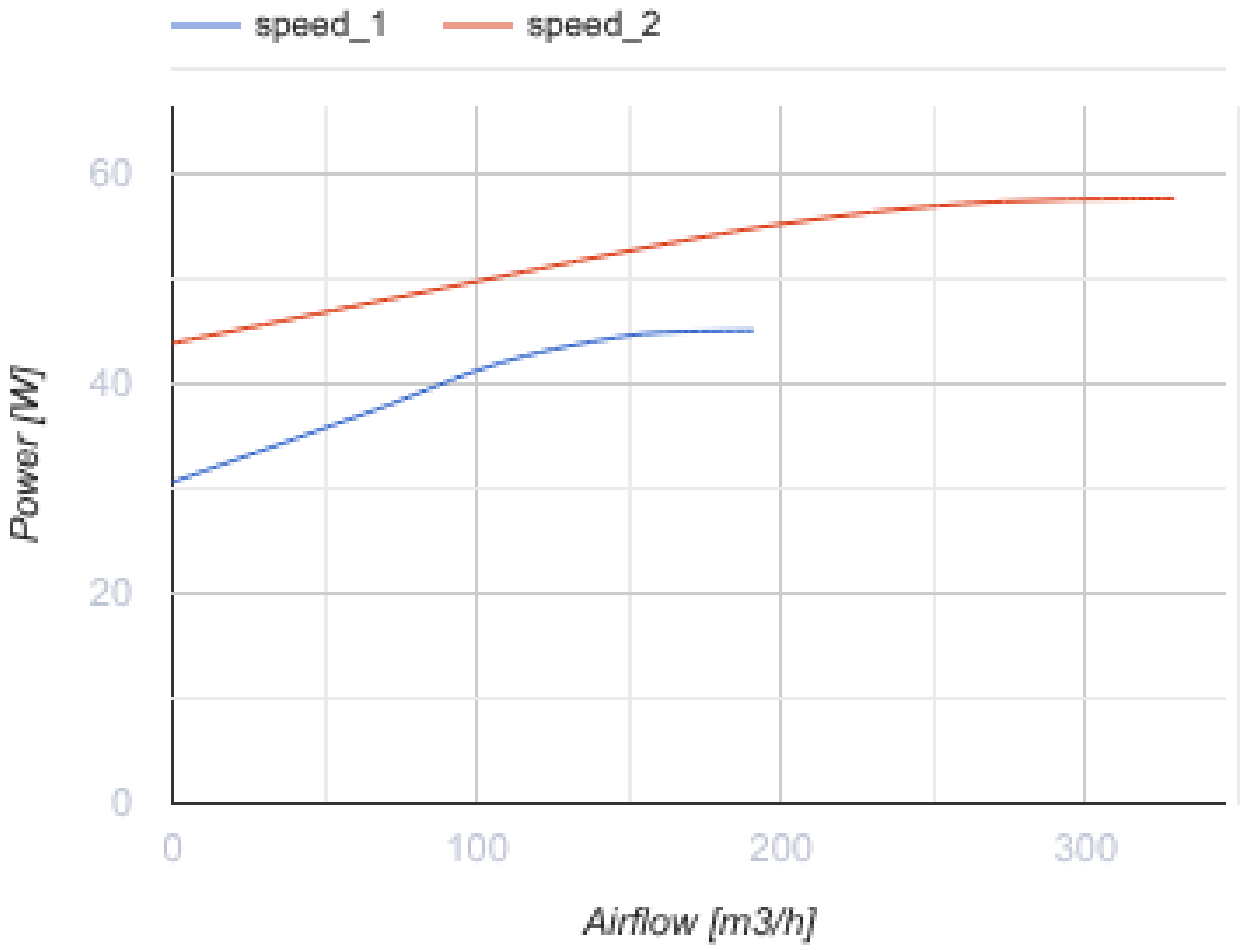
speed_1
speed_2
60
40
20
0
Power [W]
0
100
200
300
Airflow [m3/h]

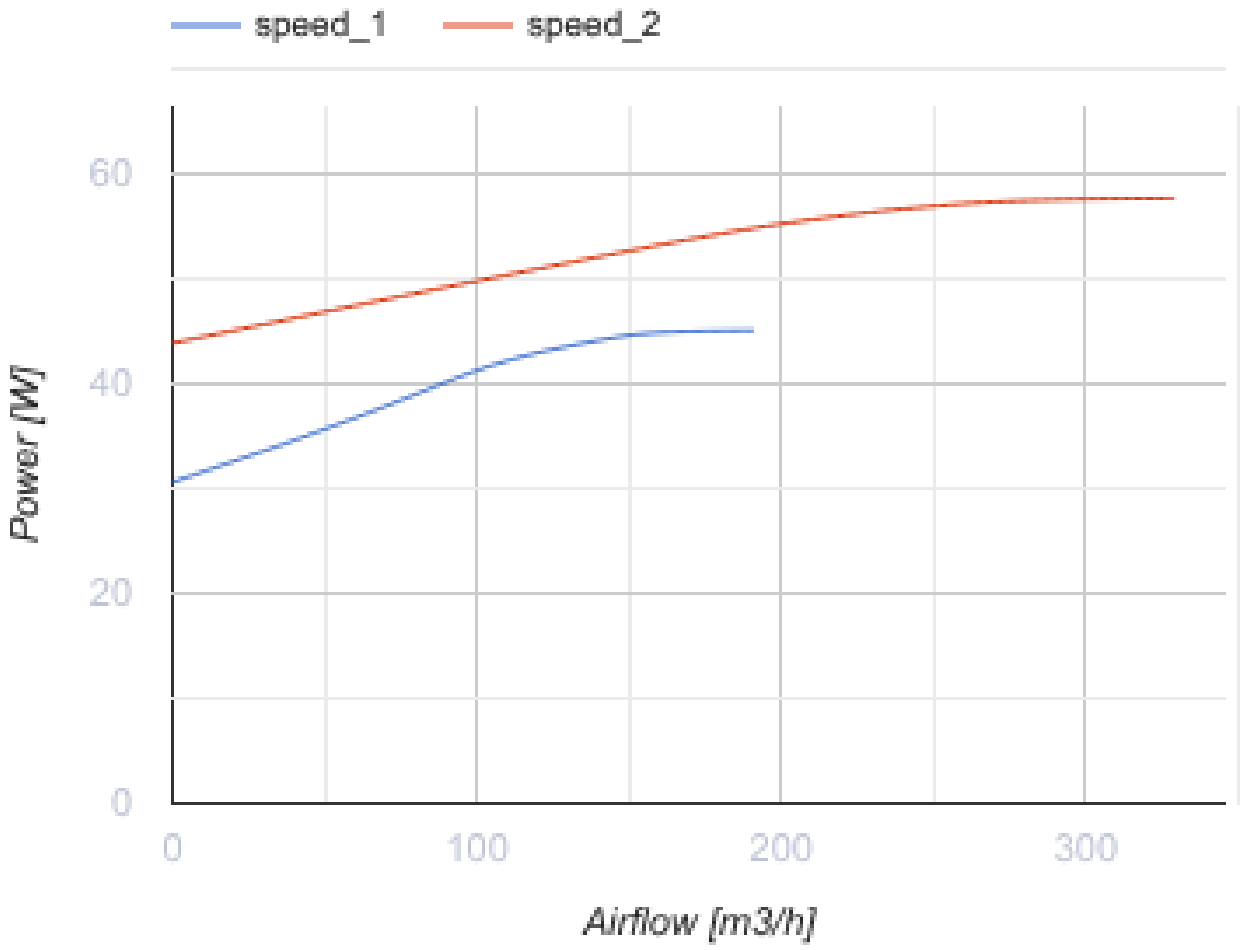

Dimensions

Ø D	Ø D1	B	L	L1	L2	L3
125	250	270	220	30	27	30

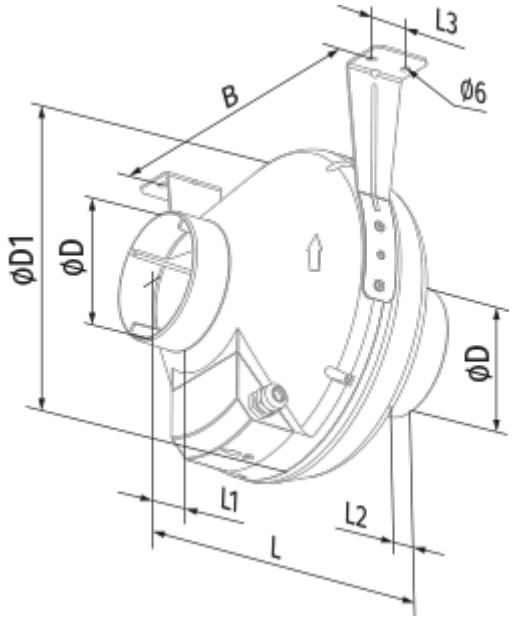
L3
B
Ø6
ØD1
ØD
ØD
L1
L2
L

Ecodesign

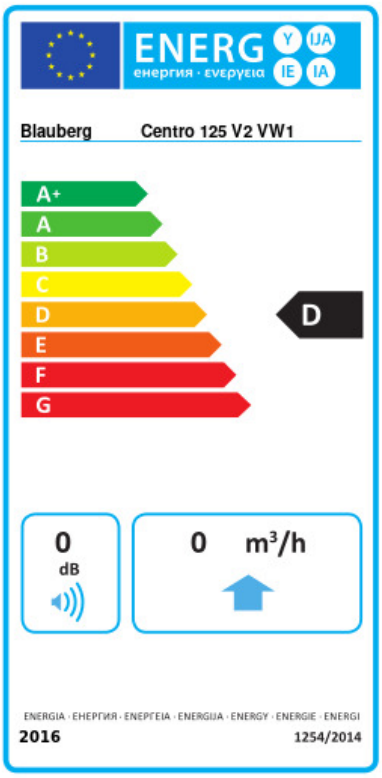

Trademark	Blauberg					
Model	Centro 125 V2 VW1					
Specific energy consumption (SEC) (kWh/(m²/a))	Cold		Average		Warm	
	-50	A+	-23	D	-7.5	F
Type of ventilation unit	Unidirectional					
Type of drive installed	2-speed					
Type of heat recovery system	None					
Maximum flow rate (m³/h)	230					
Electric power input (W)	56.3					
Reference flow rate (m³/s)	0.045					
Reference pressure difference (Pa)	50					
Specific power input (SPI) (W/(m³/h))	0.284					
Control typology	Local demand control					
Maximum external leakage rates (%)	2.7					
Sound power level (dB(A))	59					
Declared typology	RVU UVU					
The annual electricity consumption (AEC) (kWh/a)	Cold		Average		Warm	
	213		213		213	
The annual heating saved (AHS) (kWh/a)	Cold		Average		Warm	
	5536		2830		1280	

Accessories

Fittings

Name	Photo	Description
K 125		Clamp for round flexible ducts