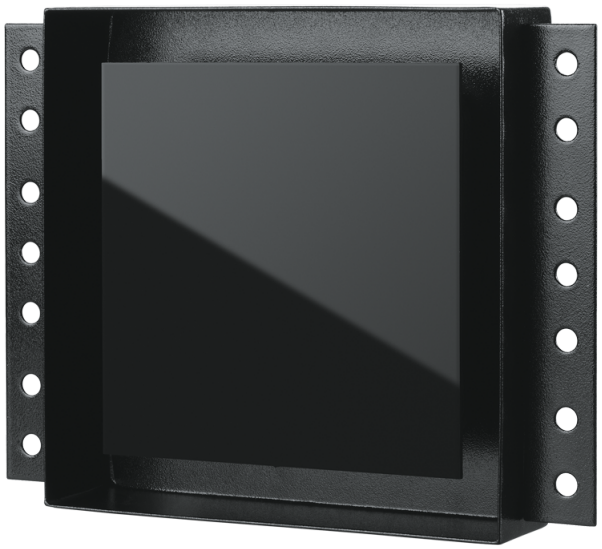

# Alphaceram 125

Flush-mounted axial fans for extract ventilation

- Impeller type: Axial
- Casing material: Metal

| | Unit of measurement | Alphaceram 125 |
|---|---|---|
| Minimum supply voltage | V | 220 |
| Maximum supply voltage | V | 240 |
| Power supply frequency | Hz | 50/60 |
| Maximum airflow | m³/h | 172 |
| Weight | kg | 1.4 |
| Ambient air temperature min | °C | 1 |
| Ambient air temperature max | °C | 40 |
| Ingress protection rating | - | IP24 |

## Dimensions

| ØD | H | W | L | L1 |
|---|---|---|---|---|
| 125 | 229 | 289 | 87 | 49 |

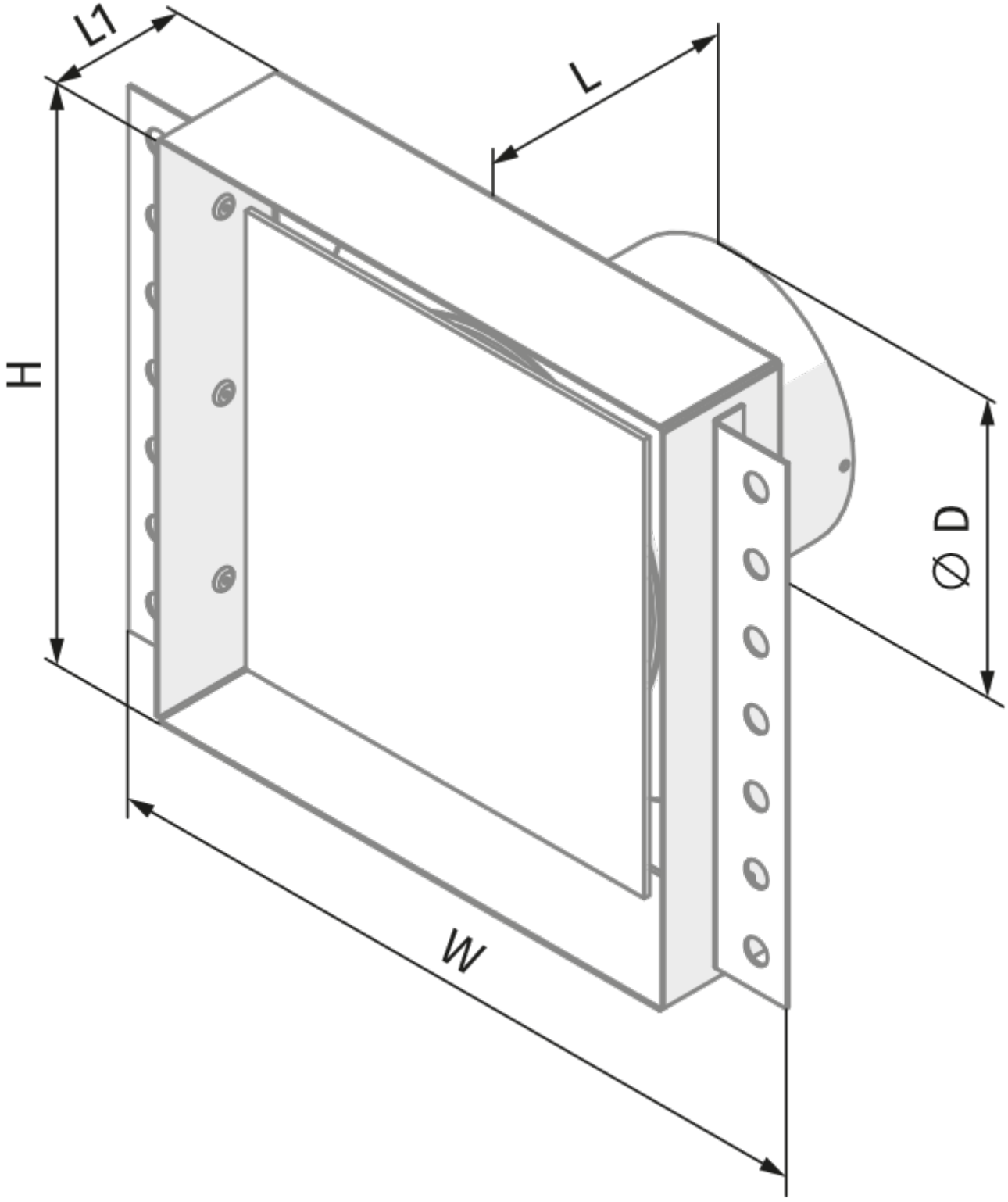
L1
L
H
Ø D
W

## Ecodesign

| | | | | | | |
|---|---|---|---|---|---|---|
| Trademark | Blauberg | | | | | |
| Model | Alphaceram 125 | | | | | |
| Specific energy consumption (SEC) (kWh/(m²/a)) | Cold | | Average | | Warm | |
| | -28.7 | B | -12.3 | E | -2.9 | F |
| Type of ventilation unit | Unidirectional | | | | | |
| Type of drive installed | Single speed | | | | | |
| Type of heat recovery system | None | | | | | |
| Maximum flow rate (m³/h) | 90 | | | | | |
| Electric power input (W) | 14 | | | | | |
| Reference flow rate (m³/s) | 0.018 | | | | | |
| Specific power input (SPI) (W/(m³/h)) | 0.156 | | | | | |
| Control typology | Manual control | | | | | |
| Maximum external leakage rates (%) | 2.7 | | | | | |
| Sound power level (dB(A)) | 53 | | | | | |
| The annual electricity consumption (AEC) (kWh/a) | Cold | | Average | | Warm | |
| | 195 | | 195 | | 195 | |
| The annual heating saved (AHS) (kWh/a) | Cold | | Average | | Warm | |
| | 3355 | | 1715 | | 776 | |